SITE DESIGN

GRADING SITE SECTION

APPROVED DRAWINGS FROM DRB PACKAGE DATED 2020.02.09

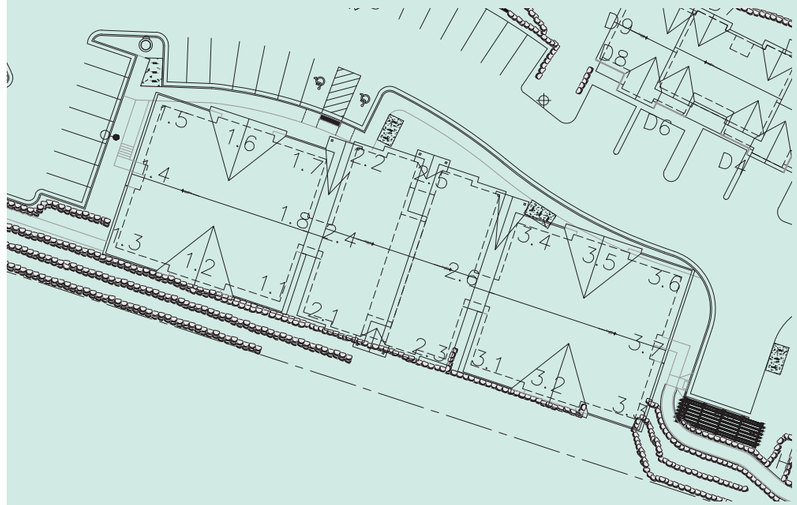

1 SITE PLAN - HEIGHT CALCS
NTS

Building Height Calculations						
	Existing Grade Elevation	Proposed Grade Elevation	Roof Elevation	Height from most Restrictive		Most Restrictive Grade
Building 1						
POINT 1.1	8390	8395	8439	49		8390
POINT 1.2	8385	8394.9	8444.9	60		8385
POINT 1.3	8383	8394.9	8438.9	56		8383
POINT 1.4	8386	8402	8446	60		8386
POINT 1.5	8390	8404	8439	49		8390
POINT 1.6	8396	8406	8444	49		8396
POINT 1.7	8400	8406.9	8438.9	38.9		8400
POINT 1.8	8403	8407	8446	43		8403
Building 2						
POINT 2.1	8393	8396.5	8416.5	23.5		8393
POINT 2.2	8398	8399	8445	47		8398
POINT 2.3	8397	8399	8443.5	46.5		8397
POINT 2.4	8403	8409	8462	60		8403
POINT 2.5	8405	8411.9	8448.9	43.9		8405
POINT 2.6	8408	8414	8460	52		8408
Building 3						
POINT 3.1	8398	8402	8446	48		8398
POINT 3.2	8401	8404.4	8454.4	53.4		8401
POINT 3.3	8404	8409	8451	47		8404
POINT 3.4	8407	8414	8461	54		8407
POINT 3.5	8410	8416	8457	47		8410
POINT 3.6	8414	8418	8454	40		8414

PROPOSED DESIGN

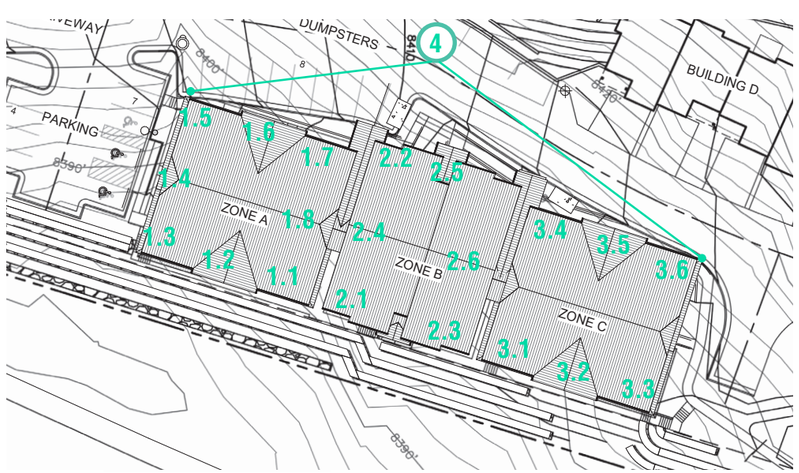

2 SITE PLAN DIAGRAM
1" = 20'-0"

Building Height Calculations						
	Existing Grade Elevation	Proposed Grade Elevation	Roof Elevation	Height from most Restrictive		Most Restrictive Grade
Zone A						
POINT 1.1	8390	8397.38	8439.04	49.04		8390
POINT 1.2	8385	8395.08	8444.71	59.71		8385
POINT 1.3	8383	8393.3	8439.04	56.04		8383
POINT 1.4	8386	8399.17	8445.93	59.93		8386
POINT 1.5	8390	8410.18	8439.04	49.04		8390
POINT 1.6	8396	8403.79	8444.71	48.71		8396
POINT 1.7	8400	8412.29	8439.04	39.04		8400
POINT 1.8	8403	8405	8445.93	42.93		8403
Zone B						
POINT 2.1	8393	8399.09	8447.98	54.98		8393
POINT 2.2	8398	8406.91	8447.98	49.98		8398
POINT 2.3	8397	8402.87	8445.68	48.68		8397
POINT 2.4	8403	8405	8459.26	56.26		8403
POINT 2.5	8405	8408.88	8456.93	51.93		8405
POINT 2.6	8408	8410	8465	57		8408
Zone C						
POINT 3.1	8398	8403.58	8451.01	53.01		8398
POINT 3.2	8401	8403.58	8456.72	55.72		8401
POINT 3.3	8404	8403.58	8451.05	47.47		8403.58
POINT 3.4	8407	8412.91	8451.01	44.01		8407
POINT 3.5	8410	8414.03	8456.72	46.72		8410
POINT 3.6	8414	8414.41	8451.05	37.05		8414

3 Shift alignment of the access road approximately 6'-0" to the north to meet ADA and TOV requirements (prior floor plans and site plans were not coordinated and did not accommodate for road placement).

4 Adjust grading and roof form to meet requirements of a 3-story building with basement, as designed in original approval.

5 Adjust sidewalk layout to provide conforming accessible routes throughout per TOV requirements.

6 Adjust rock walls to limit height to 3'-0" and less than 2'-0 from the front setback per TOV requirements.

7 Coordinate Civil and Architectural to accurately represent proposed apartment building floor plan (prior floor plans and site plans were not coordinated and did not accommodate for road placement).

8 Coordinate Civil and Architectural to accurately represent proposed townhome floor plan (prior floor plans and site plans were not coordinated and did not accommodate for road placement).

9 Adjust rock fall wall design to a balanced cut and fill rather than entirely fill and soften transition at rear of Townhomes. This will result in less construction traffic and project impact.

10 Update rear Townhome site work to minimize overlot grading and preserve existing vegegation.

13 Increase accessible parking to meet Code and relocate to achieve required accessible route per TOV requirements.

14 Adjust underground utilities to conform to Eagle River Water and Sanitation District standards.

VAIL RESORTS EXPERIENCE OF A LIFETIME

APPROVED ELEVATION FROM DRB PACKAGE DATED 2020.02.09

PROPOSED DESIGN

1 SOUTH CODE ELEVATION
1/8" = 1'-0"

BUILDING DESIGN

EXTERIOR ELEVATIONS

Overall building layout and exterior grading is revised to support the position of a code-compliant 3-Story building with a basement, to provide compliant handicap access and adequate exiting.

If we had followed the horizontal controls from the previous DRB submittal that would have resulted in the project being classified per IBC guidelines as a 4-Story building. The previous layout did not provide adequate exiting from all occupied areas, or code-required accessible routes. Solar panels were also included to conform to the DRB conditions of approval dated 2020.03.04.

24 Coordinate elevation changes between Zones A-B and B-C to lower Average Grade Plane to facilitate required Accessible Routes for the project per TOV requirements.

25 Increase elevation of Spring Points at roof level by 1' - 8" to meet Code requirements for finished ceiling heights on top floors to achieve code minimums.

26 Reduce Floor-to-Floor heights at all levels to offset the increase in Spring Points at the roof level as noted above.

27 Reduce angle of kickers at low roof overhangs to comply with code compliance and clearances below; changed kicker angle at high roofs to match and meet code requirements.

28 Slot window elevation changed to accommodate the elevation of the low entry roofs.

34 Change roof material from asphalt shingles to standing seam metal per DRB conditions of approval dated 2020.03.04.

37 Building entry point design updated per DRB conditions of approval dated 2020.03.04.

40 Adjust roof form meet approved building heights.

VAIL RESORTS EXPERIENCE OF A LIFETIME

APPROVED ELEVATION FROM DRB PACKAGE 2020.02.09

BUILDING DESIGN

EXTERIOR ELEVATIONS

Overall building layout and exterior grading is revised to support the position of a code-compliant 3-Story building with a basement, to provide compliant handicap access and adequate exiting.

If we had followed the horizontal controls from the previous DRB submittal that would have resulted in the project being classified per IBC guidelines as a 4-Story building. The previous layout did not provide adequate exiting from all occupied areas, or code-required accessible routes. Solar panels were also included to conform to the DRB conditions of approval dated 2020.03.04.

24 Coordinate elevation changes between Zones A-B and B-C to lower Average Grade Plane to facilitate required Accessible Routes for the project per TOV requirements.

25 Increase elevation of Spring Points at roof level by 1' - 8" to meet Code requirements for finished ceiling heights on top floors to achieve code minimums.

26 Reduce Floor-to-Floor heights at all levels to offset the increase in Spring Points at the roof level as noted above.

27 Reduce angle of kickers at low roof overhangs to comply with code compliance and clearances below; changed kicker angle at high roofs to match and meet code requirements.

28 Slot window elevation changed to accommodate the elevation of the low entry roofs.

34 Change roof material from asphalt shingles to standing seam metal per DRB conditions of approval dated 2020.03.04.

37 Building entry point design updated per DRB conditions of approval dated 2020.03.04.

40 Adjust roof form meet approved building heights.

PROPOSED DESIGN

VAIL RESORTS EXPERIENCE OF A LIFETIME

APPROVED ELEVATIONS FROM DRB PACKAGE DATED 2020.02.09

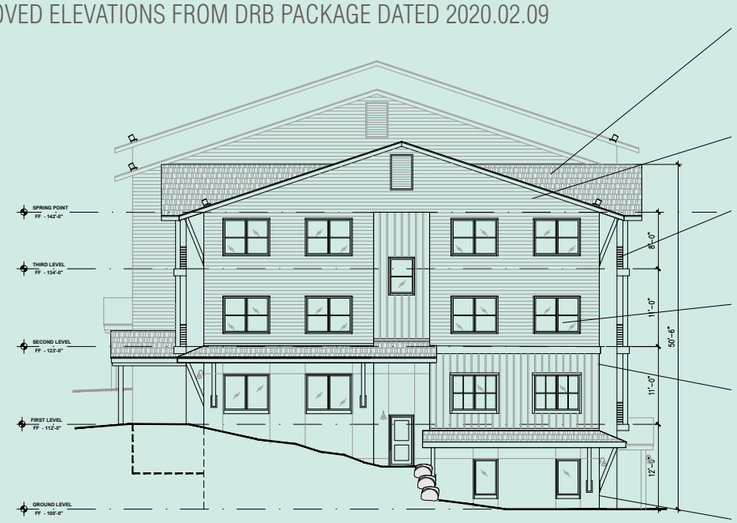

1 **BUILDINGS 1/2/3 - WEST ELEVATION**
1/8" = 1'-0"

2 **BUILDINGS 1/2/3 - EAST ELEVATION**
1/8" = 1'-0"

PROPOSED DESIGN

2 WEST CODE ELEVATION - ZONE A
1/8" = 1'-0"

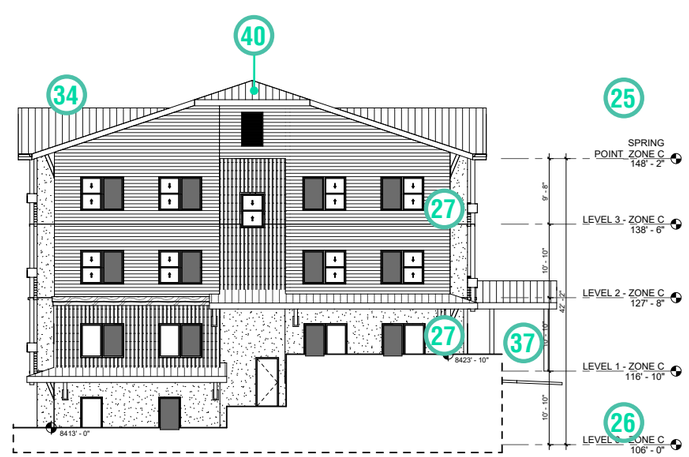

5 EAST CODE ELEVATION - ZONE C
1/8" = 1'-0"

BUILDING DESIGN

EXTERIOR ELEVATIONS

Overall building layout and exterior grading is revised to support the position of a code-compliant 3-Story building with a basement, to provide compliant handicap access and adequate exiting.

If we had followed the horizontal controls from the previous DRB submittal that would have resulted in the project being classified per IBC guidelines as a 4-Story building. The previous layout did not provide adequate exiting from all occupied areas, or code-required accessible routes. Solar panels were also included to conform to the DRB conditions of approval dated 2020.03.04.

24 Coordinate elevation changes between Zones A-B and B-C to lower Average Grade Plane to facilitate required Accessible Routes for the project per TOV requirements.

25 Increase elevation of Spring Points at roof level by 1' - 8" to meet Code requirements for finished ceiling heights on top floors to achieve code minimums.

26 Reduce Floor-to-Floor heights at all levels to offset the increase in Spring Points at the roof level as noted above.

27 Reduce angle of kickers at low roof overhangs to comply with code compliance and clearances below; changed kicker angle at high roofs to match and meet code requirements.

28 Slot window elevation changed to accommodate the elevation of the low entry roofs.

34 Change roof material from asphalt shingles to standing seam metal per DRB conditions of approval dated 2020.03.04.

37 Building entry point design updated per DRB conditions of approval dated 2020.03.04.

40 Adjust roof form meet approved building heights.

VAIL RESORTS
EXPERIENCE OF A LIFETIME

DRAWING FROM APPROVED DRB PACKAGE DATED 2020.02.09

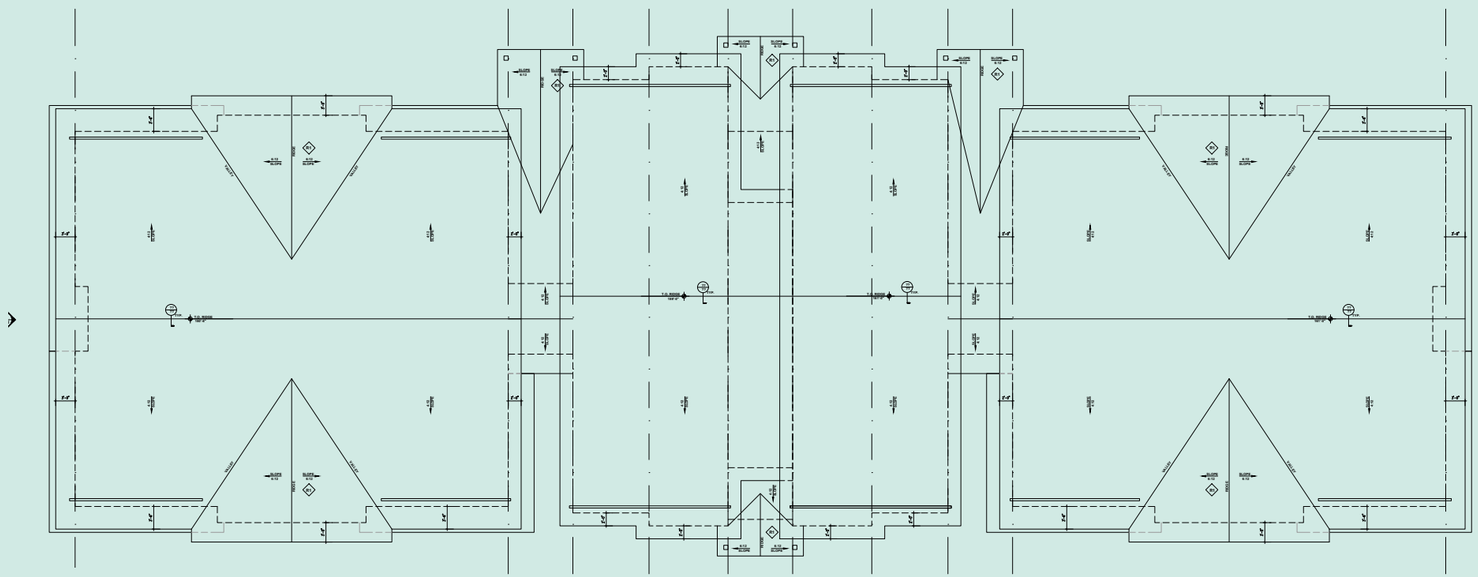

1 BUILDINGS 1/2/3 - ROOF PLAN
1/8" = 1'-0"

BUILDING DESIGN

ROOF

25 Change Building Height call-outs to be accurate. Previously approved roof plans and elevation callouts were not coordinated.

34 Change roofing material from asphalt shingles to standing seam metal and update corresponding dormer locations per DRB conditions of approval dated 2020.03.04.

NOTE: material change to standing seam applies to both high and low roofs.

40 Adjust roof form meet approved building heights.

PROPOSED DESIGN

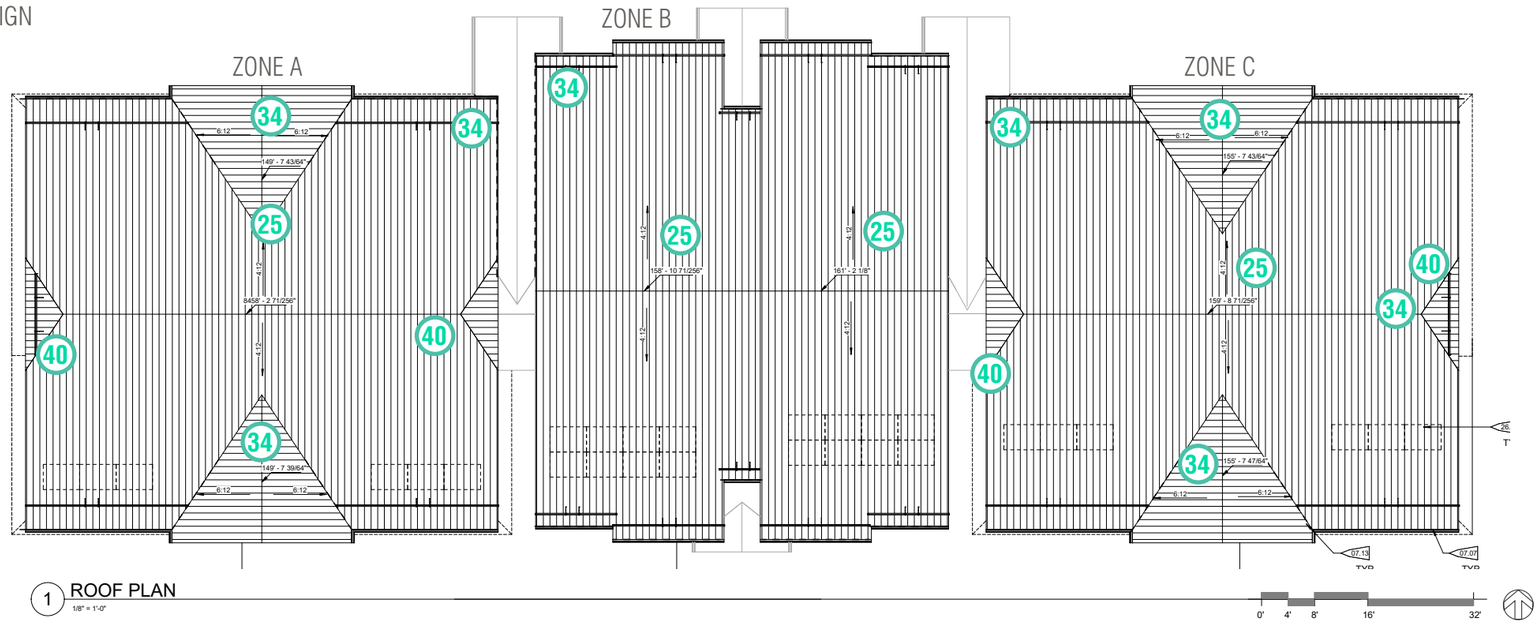

1 ROOF PLAN
1/8" = 1'-0"

VAIL RESORTS
EXPERIENCE OF A LIFETIME

DRAWING FROM APPROVED DRB PACKAGE DATED 2020.02.09

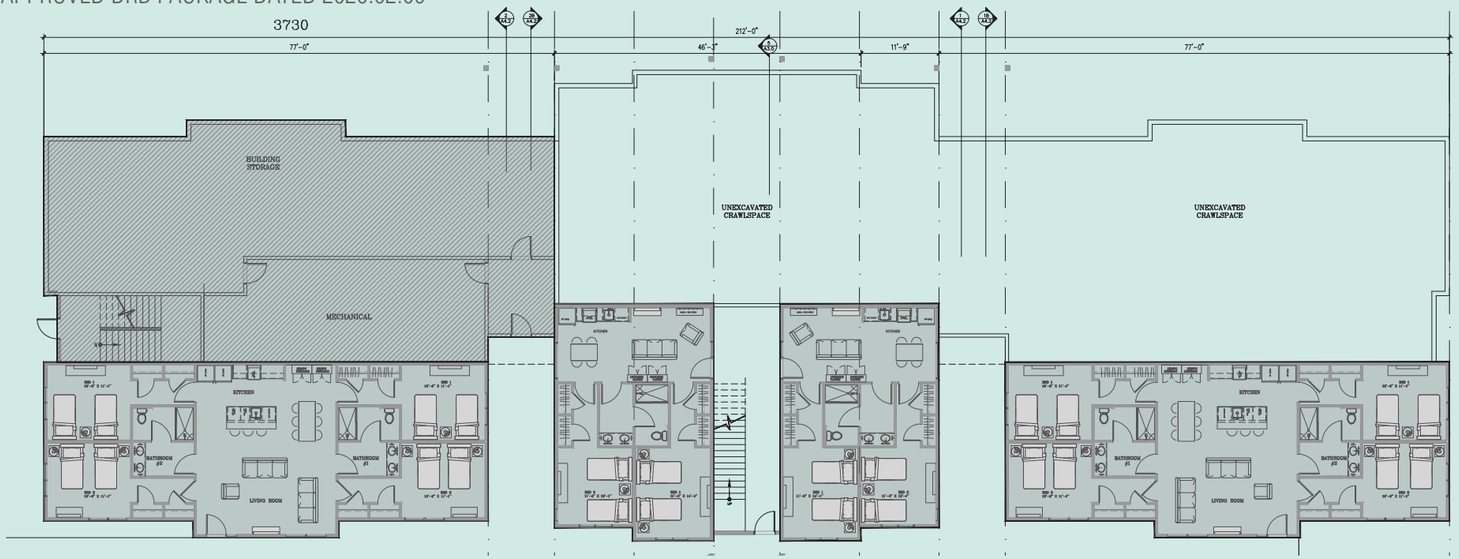

1 **BUILDINGS 1/2/3 - 1ST. LEVEL PLAN - GRFA**
1/8" = 1'-0"

BUILDING DESIGN

FLOOR PLANS - BASEMENT

Trash service rooms were added as the previous design did not provide an accessible path to the trash enclosure. Laundry rooms were added. A water entry room was added as this is required by the fire code.

20 Add Trash Collection room(s) on accessible route.

21 Add Laundry room(s) on accessible route.

22 Add Property Manager's Office on accessible route.

23 Add dedicated Water Entry room at Level 0.

30 Relocate Mechanical and Electrical rooms.

PROPOSED DESIGN

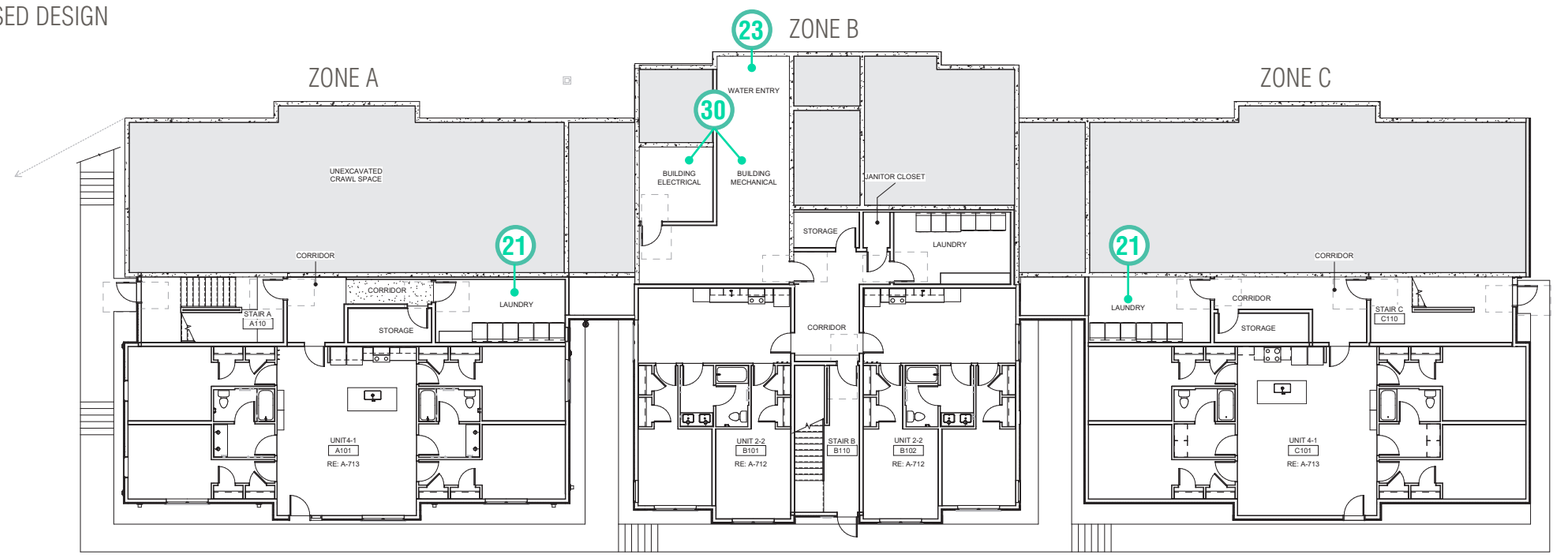

1 LEVEL 0 FLOOR PLAN - OVERALL
1/8" = 1'-0"

VAIL RESORTS EXPERIENCE OF A LIFETIME

DRAWING FROM APPROVED DRB PACKAGE DATED 2020.02.09

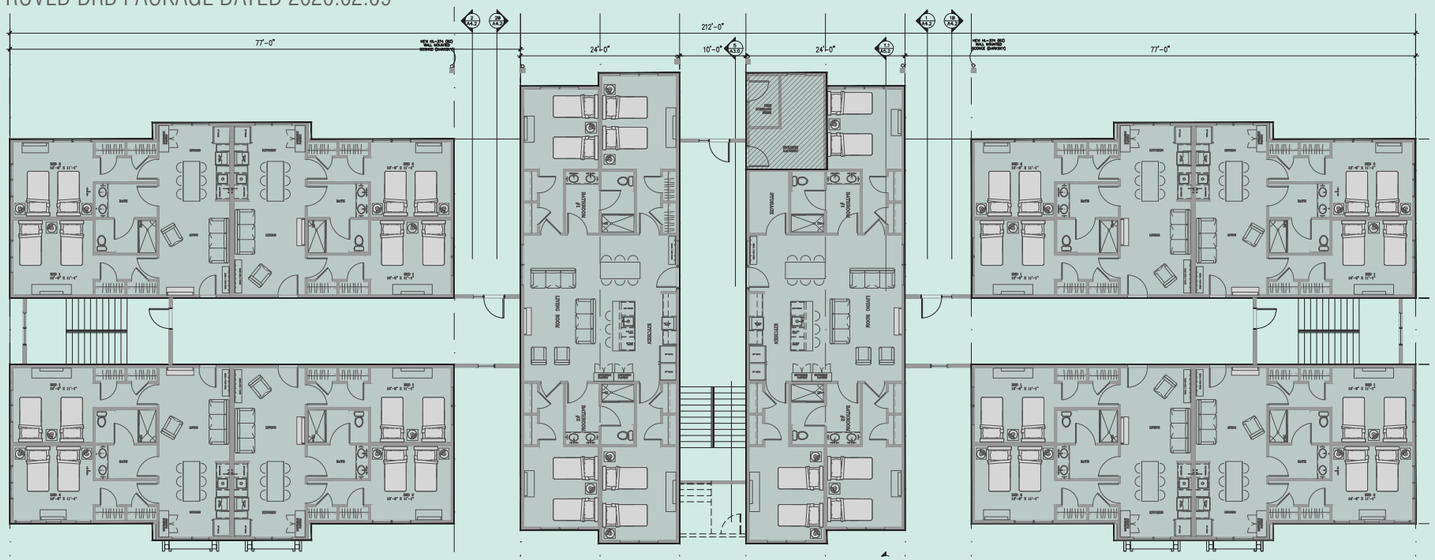

2 BUILDINGS 1/2/3 - 2ND. LEVEL PLAN - GRFA
1/8" = 1'-0"

BUILDING DESIGN

FLOOR PLANS - LEVEL 1

Trash service rooms were added as the previous design did not provide an accessible path to the trash enclosure. Laundry rooms were added. A water entry room was added as this is required by the fire code.

20 **Add Trash Collection room(s) on accessible route.**

21 **Add Laundry room(s) on accessible route.**

22 **Add Property Manager's Office on accessible route.**

23 **Add dedicated Water Entry room at Level 0.**

30 **Relocate Mechanical and Electrical rooms.**

PROPOSED DESIGN

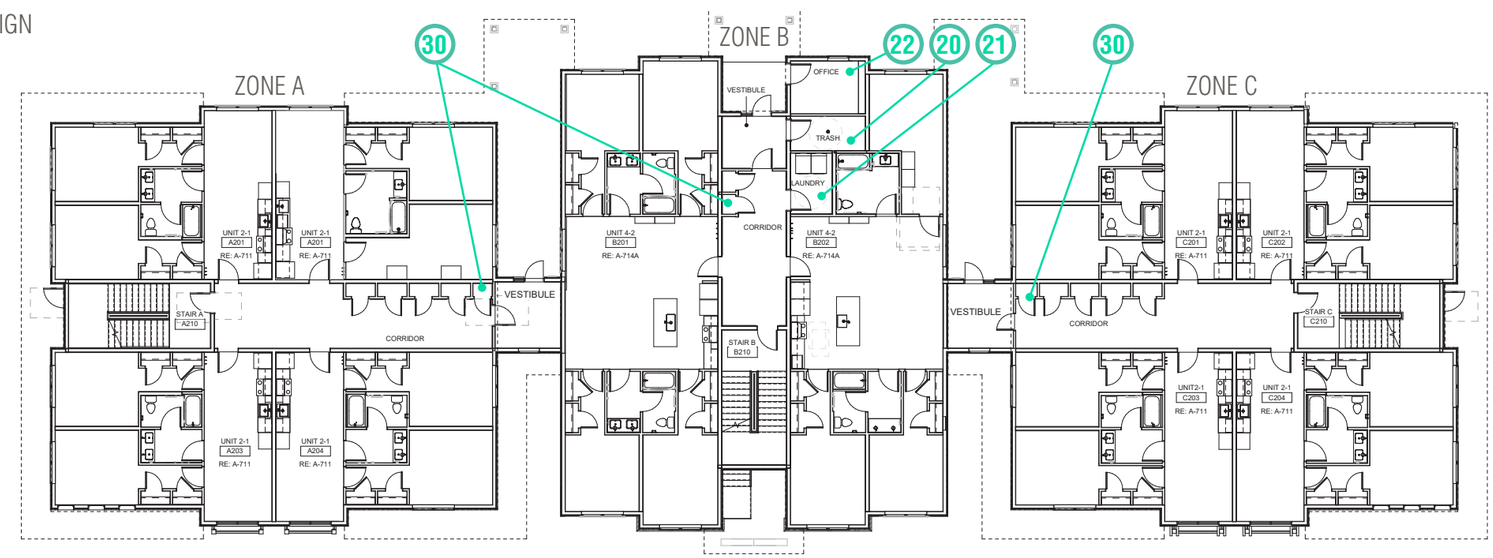

1 LEVEL 1 FLOOR PLAN - OVERALL
1/8" = 1'-0"

0' 4' 8' 16' 32'

N

VAIL RESORTS EXPERIENCE OF A LIFETIME

DRAWING FROM APPROVED DRB PACKAGE DATED 2020.02.09

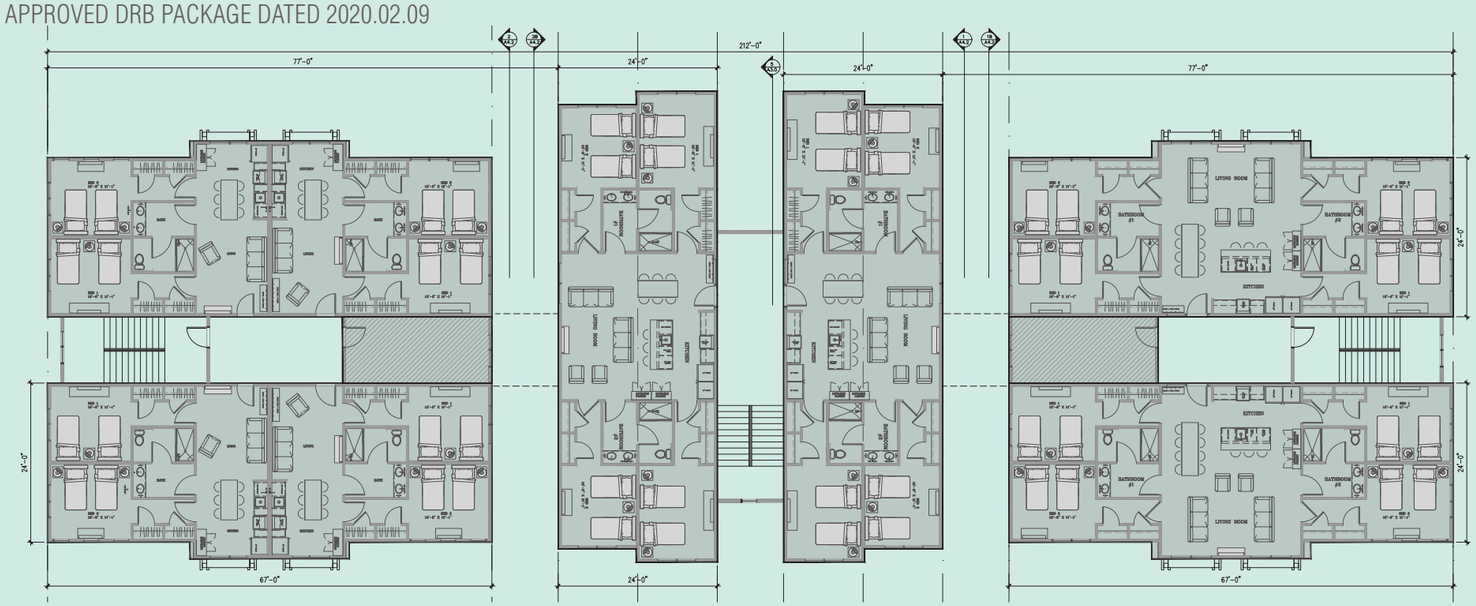

3 BUILDINGS 1/2/3 - 3RD. LEVEL PLAN - GRFA
1/8" = 1'-0"

BUILDING DESIGN

FLOOR PLANS - LEVEL 2

Trash service rooms were added as the previous design did not provide an accessible path to the trash enclosure. Laundry rooms were added. A water entry room was added as this is required by the fire code.

20 Add Trash Collection room(s) on accessible route.

21 Add Laundry room(s) on accessible route.

22 Add Property Manager's Office on accessible route.

23 Add dedicated Water Entry room at Level 0.

30 Relocate Mechanical and Electrical rooms.

PROPOSED DESIGN

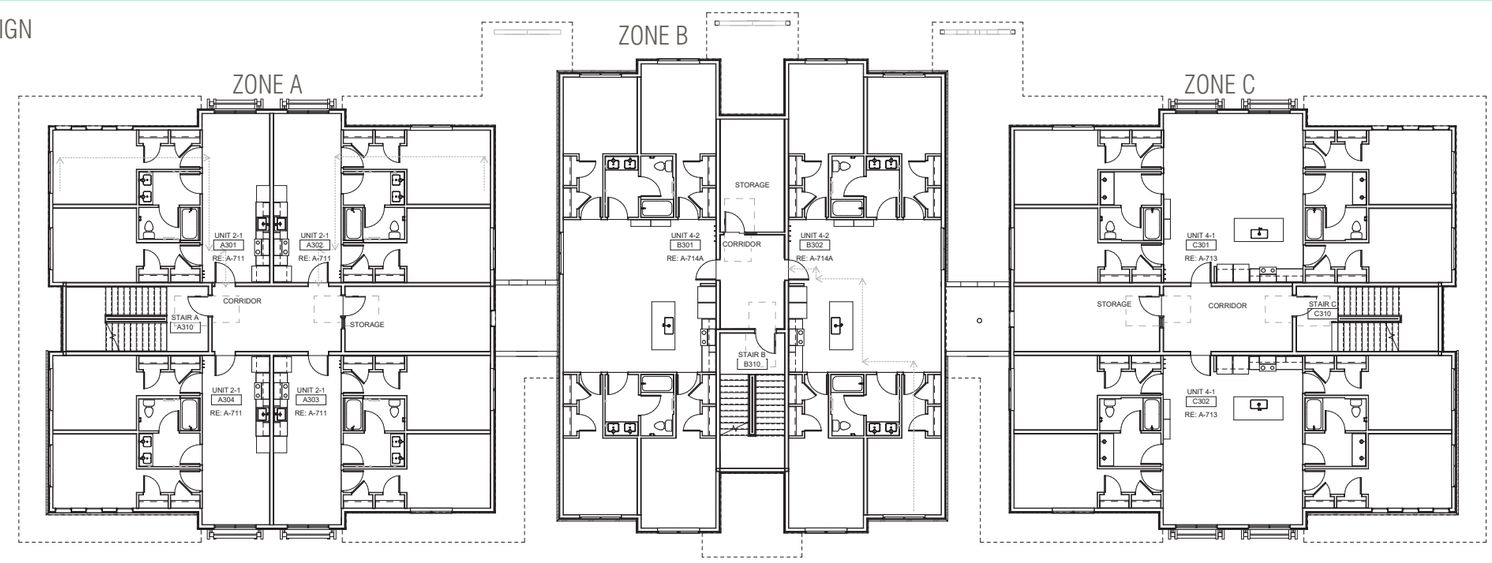

1 LEVEL 2 FLOOR PLAN - OVERALL
1/8" = 1'-0"

0' 4' 8' 16' 32'

N

VAIL RESORTS
EXPERIENCE OF A LIFETIME

DRAWING FROM APPROVED DRB PACKAGE DATED 2020.02.09

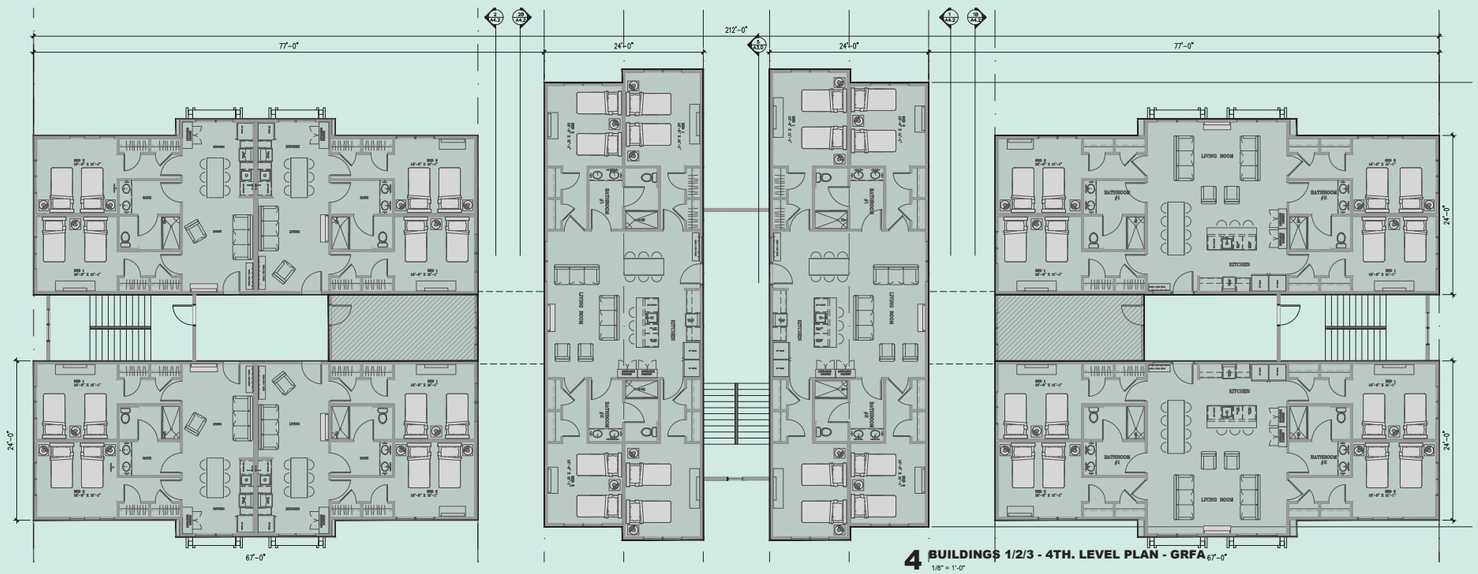

4 BUILDINGS 1/2/3 - 4TH. LEVEL PLAN - GRFA
1/8" = 1'-0"

BUILDING DESIGN

FLOOR PLANS - LEVEL 3

Trash service rooms were added as the previous design did not provide an accessible path to the trash enclosure. Laundry rooms were added. A water entry room was added as this is required by the fire code.

- **20 Add Trash Collection room(s) on accessible route.**
- **21 Add Laundry room(s) on accessible route.**
- **22 Add Property Manager's Office on accessible route.**
- **23 Add dedicated Water Entry room at Level 0.**
- **30 Relocate Mechanical and Electrical rooms.**

PROPOSED DESIGN

ZONE A

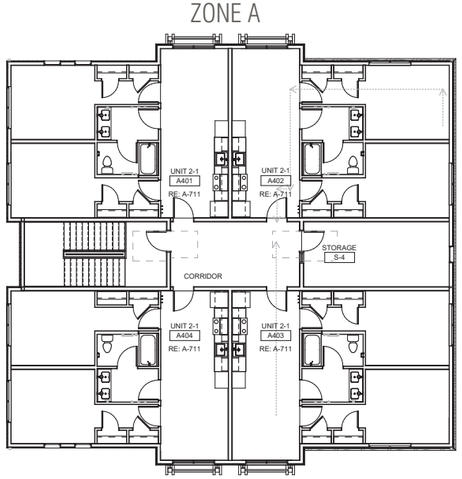

ZONE B

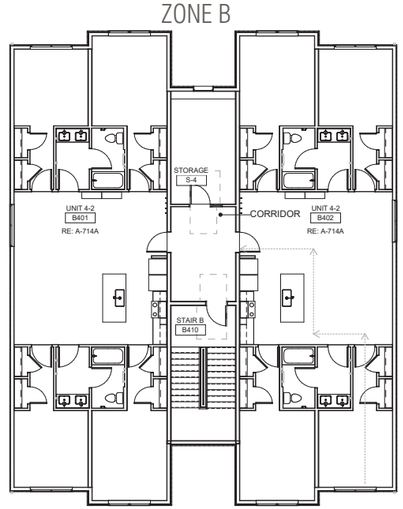

ZONE C

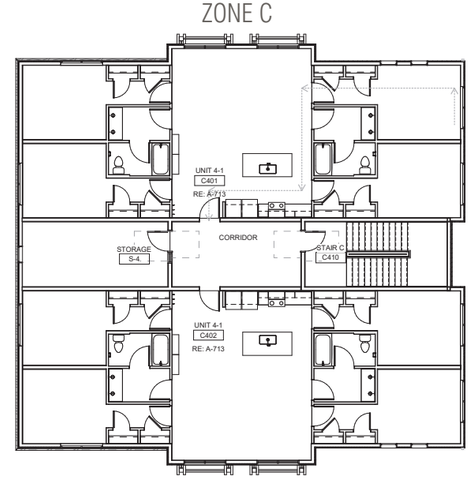

1 LEVEL 3 FLOOR PLAN - OVERALL
1/8" = 1'-0"

0' 4' 8' 16' 32'

N

VAIL RESORTS EXPERIENCE OF A LIFETIME

VAIL TOWN PLANNING AND ENVIRONMENTAL AGENDA MEMO

MEETING DATE: 5/4/2022

ITEM/TOPIC: DRB22-0133 - Colorado Morning Star Realty LLC

ATTACHMENTS:

File Name	Description
IMG_0770.jpg	Photo
DRB22-0133_Plan_Set.pdf	Plan Set

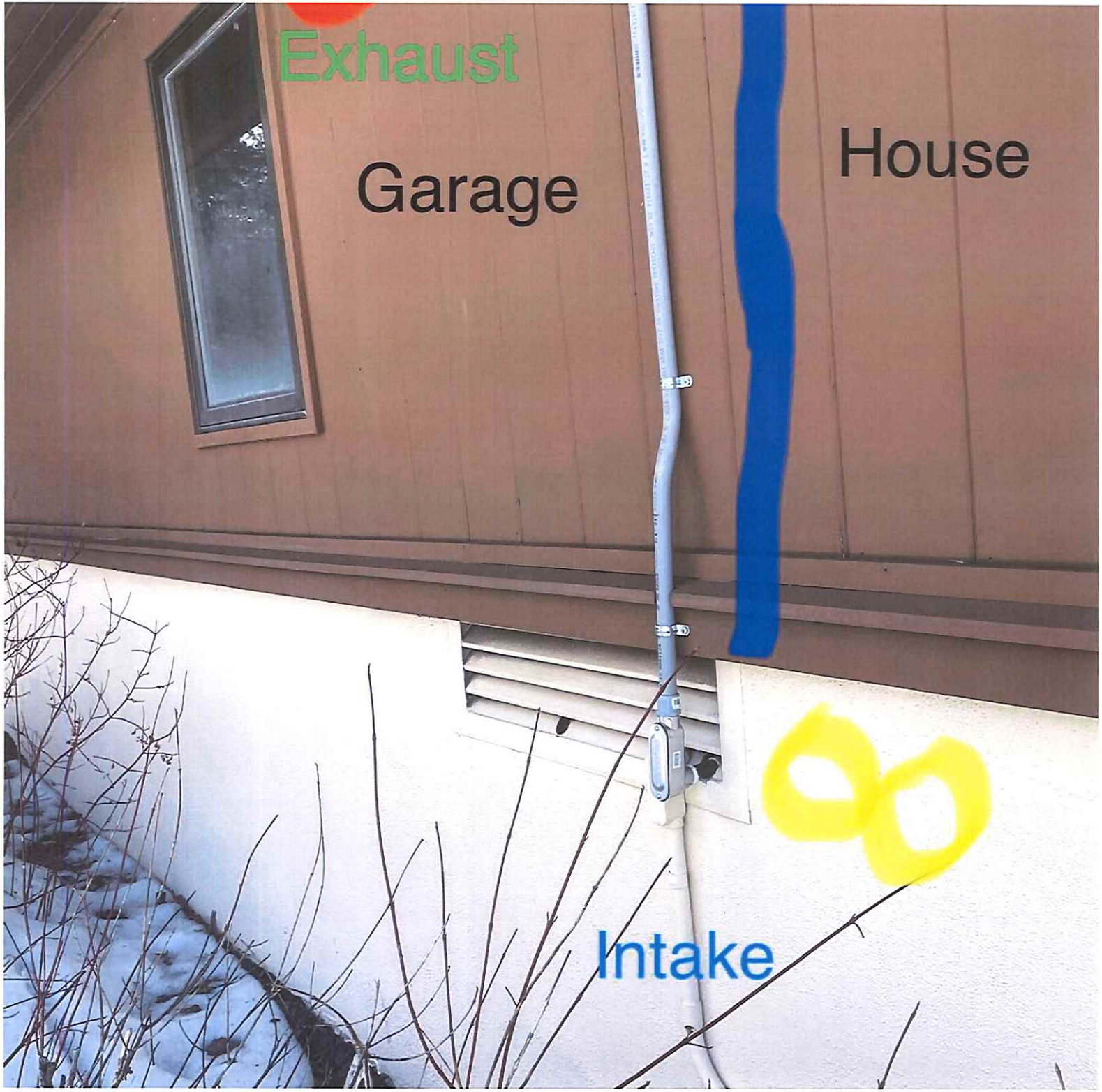
Exhaust
Garage
House
Intake

EXhausT brought out Past over hang
AIR INTake by EXISTING Combustion air

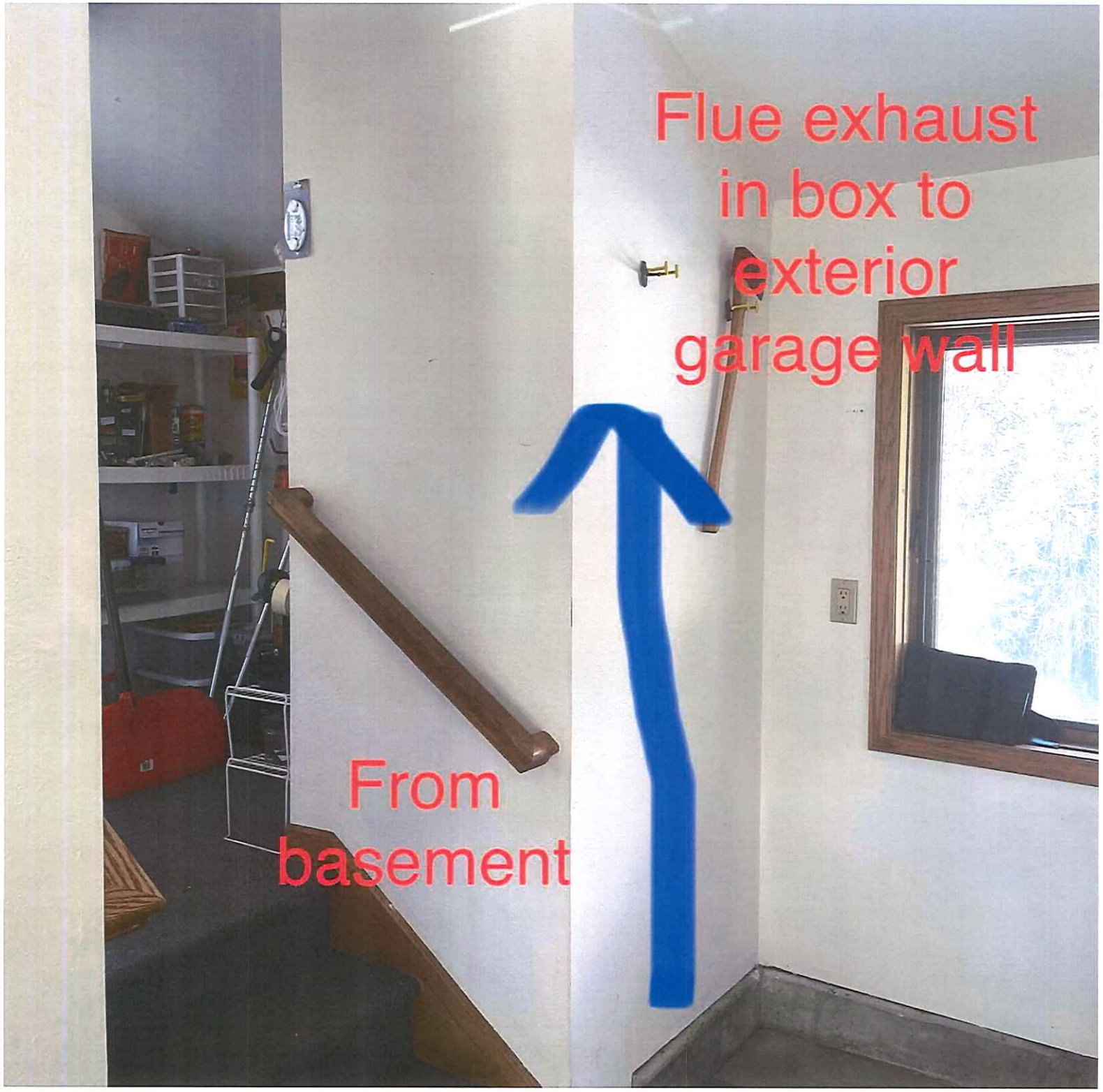
Flue exhaust
in box to
exterior
garage wall
From
basement

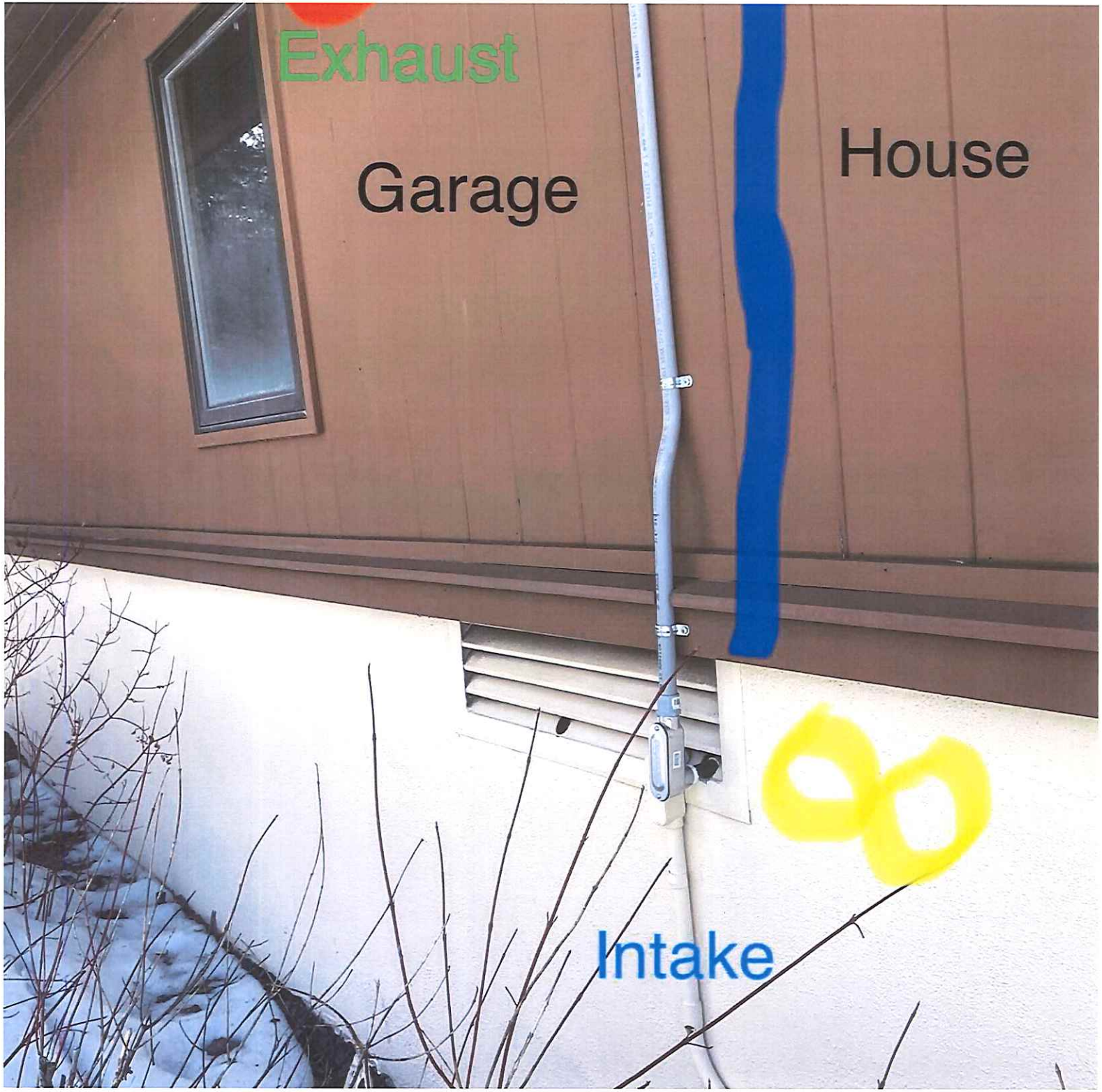
Exhaust
Garage
House
Intake

EXhausT brought out Past over hang
AIR INTake by EXISTING Combustion air

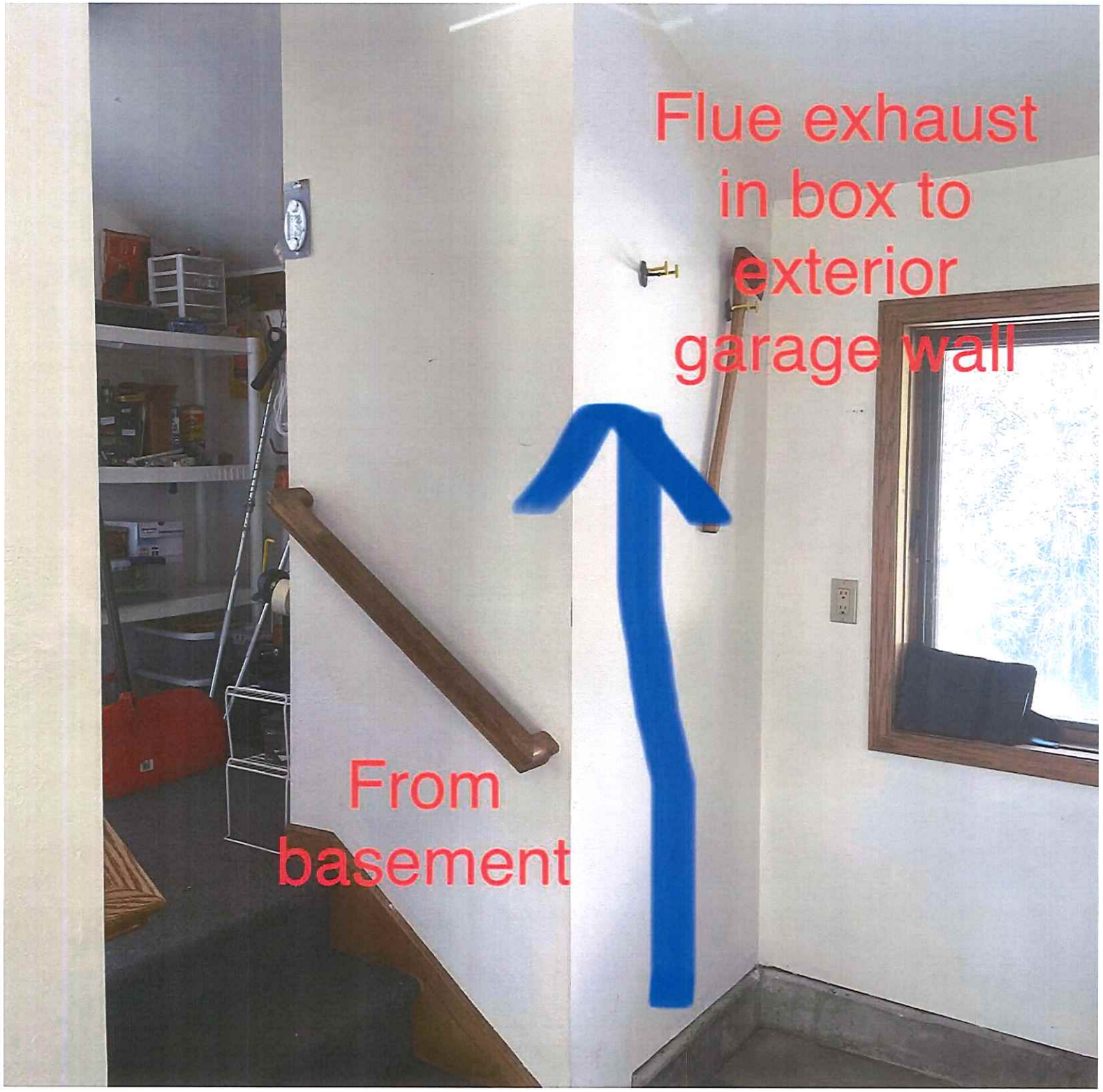
Flue exhaust
in box to
exterior
garage wall
From
basement

4997 Main Gore Dr

all 3" PVC Sch 40 Pipe w/ Bird Screen

VAIL TOWN PLANNING AND ENVIRONMENTAL AGENDA MEMO

MEETING DATE: 5/4/2022

ITEM/TOPIC:
DRB21-0451 -Gravity Haus

ATTACHMENTS:

File Name	Description
DRB21-0451_Plans_fo_5-4.pdf	DRB21-0451 Plans

VICINITY MAP:
LOCATION PLAN - 1"=200'

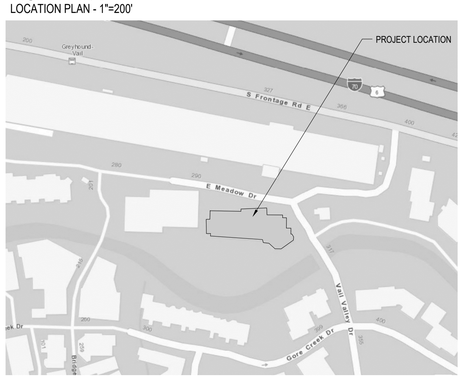

VICINITY MAP:
LOCATION PLAN - 1"=1000'

2

SUMMARY OF WORK:

RENOVATION OF LEVEL 1 ENRTY EXTERIOR AT EXISTING HOTEL AND CONDOMINIUM BUILDING

MAIN LEVEL (1)
- ADD MOSS ROCK HALF WALL WITH STONE CAP AND 7" TALL TOP RAIL

PROJECT DIRECTORY:

ARCHITECT
StudioLemonade
Daniel A Drews - AIA
4950 Ward Rd
Wheat Ridge CO 80033
303.449.0038
daniel@studiolemonade.com

OWNER
Gravity Haus Vail LLC
4624 Central Park Boulevard, Suite 101
Denver, Colorado 80238

SHEET INDEX:

G001 COVER SHEET
A103 LEVEL 1 PLANS
A202 ELEVATIONS

STUDIOLEMONADE

4950 Ward Rd,
Wheat Ridge, CO 80033
p. 303 . 449 . 0038

All design documents prepared by studioLEMONADE shall remain property of studioLEMONADE and shall not be copied, changed, or disclosed in any form whatsoever without first obtaining the express written consent of studioLEMONADE.

NOTICE: DUTY OF COOPERATION
Release of these plans contemplates further cooperation among the owner, his contractor, and the designer. Design and construction are complex. Although the designer and his consultants have performed their services with care and diligence, they cannot guarantee perfection. Communication is imperfect and every contingency cannot be anticipated. Any ambiguity or discrepancy discovered by the use of these plans shall be reported immediately to the designer. Failure to notify the designer compounds misunderstanding and increases construction costs. A failure to cooperate by a simple notice to the designer shall relieve the designer from his responsibility for the consequences. Changes made from the plans without consent of the designer are unauthorized and shall relieve the designer of responsibility for all consequences arriving out of such changes.

GRAVITY HAUS - VAIL
352 EAST MEADOW DRIVE, VAIL CO, 81657
VAIL VILLAGE FILING 1, TRACT B

REVISIONS:

Note:
REV 2 11.03.2021

Project #: 408

PLANNING SUBMITTAL

COVER SHEET

G001

09.29.2021

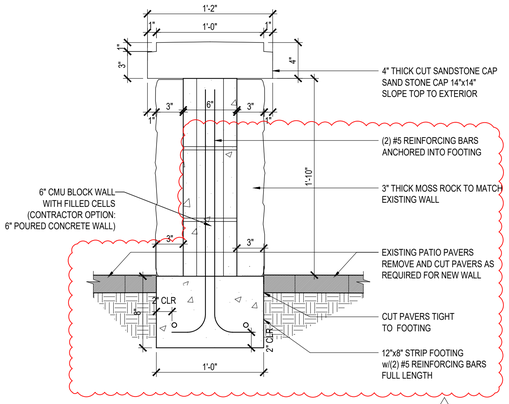

6 STONE COLUMN

SCALE: N/A

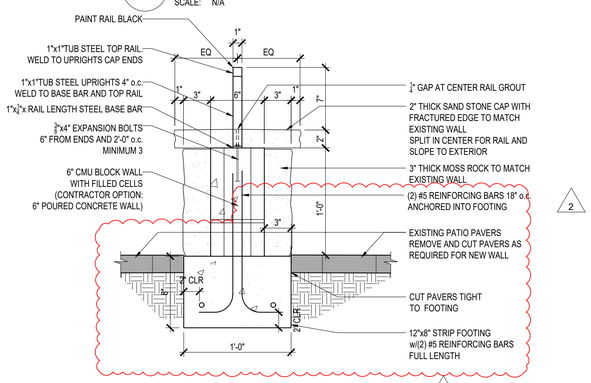

5 STONE WALL

SCALE: N/A

2" SANDSTONE CAP WITH
FRACTURED EDGE

4 STONE CAP

SCALE: N/A

GALLEGOS STONE
#302 ALPINA MOSS ROCK

3 WALL STONE

SCALE: N/A

2 EXISTING EXTERIOR ELEVATION - EAST

SCALE: 1/8" = 1'-0"

1 PROPOSED EXTERIOR ELEVATION - EAST

SCALE: 1/8" = 1'-0"

STUDIOLEMONADE

4950 Ward Rd,
Wheat Ridge, CO 80033
p. 303 . 449 . 0038

All design documents prepared by studioLEMONADE shall remain property of studioLEMONADE and shall not be copied, changed, or disclosed in any form whatsoever without first obtaining the express written consent of studioLEMONADE.

NOTICE: DUTY OF COOPERATION
Release of these plans contemplates further cooperation among the owner, his contractor, and the designer. Design and construction are complex. Although the designer and his consultants have performed their services with care and diligence, they cannot guarantee perfection. Communication is imperfect and every contingency cannot be anticipated. Any ambiguity or discrepancy discovered by the use of these plans shall be reported immediately to the designer. Failure to notify the designer compounds misunderstanding and increases construction costs. A failure to cooperate by a simple notice to the designer shall relieve the designer from his responsibility for the consequences. Changes made from the plans without consent of the designer are unauthorized and shall relieve the designer of responsibility for all consequences arriving out of such changes.

gravity haus

GRAVITY HAUS - VAIL PHASE 2 RENOVATION

352 EAST MEADOW DRIVE, VAIL CO, 81657
VAIL VILLAGE FILING 1, TRACT B

REVISIONS:

Note:
REV 1 10.20.2021
REV 2 11.03.2021
REV3 04.25.2022

Project #: 405

DRB SET

EXTERIOR ELEVATIONS

A202

09.29.21

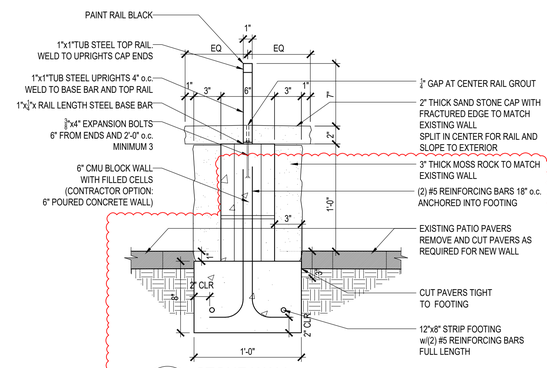

6 STONE WALL

SCALE: N/A

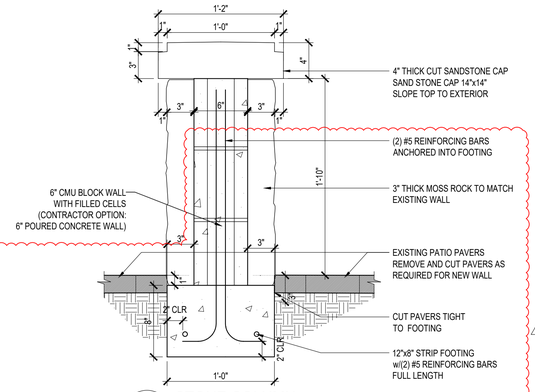

5 STONE COLUMN

SCALE: N/A

2" SANDSTONE CAP WITH
FRACTURED EDGE

4 STONE CAP

SCALE: N/A

GALLEGOS STONE
#302 ALPINA MOSS ROCK

3 WALL STONE

SCALE: N/A

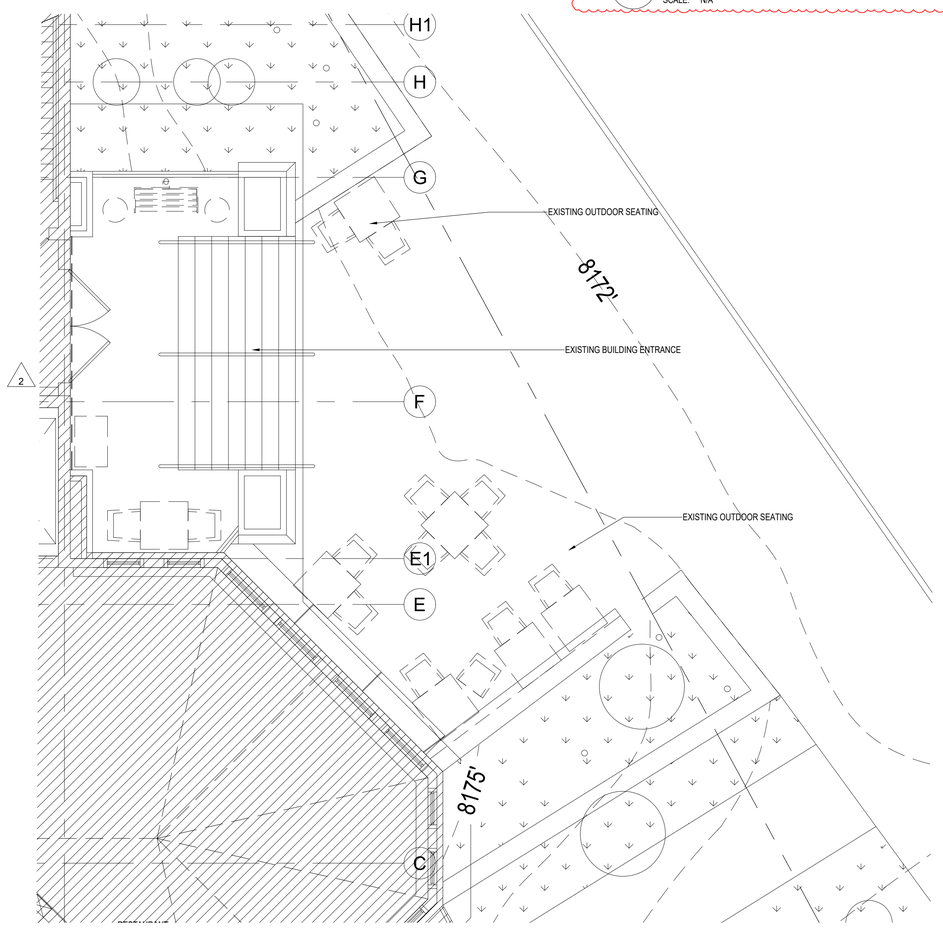

2 MAIN LEVEL (LEVEL 1) EXISTING PLAN

SCALE: 1/4" = 1'-0"

PLAN NORTH TRUE NORTH

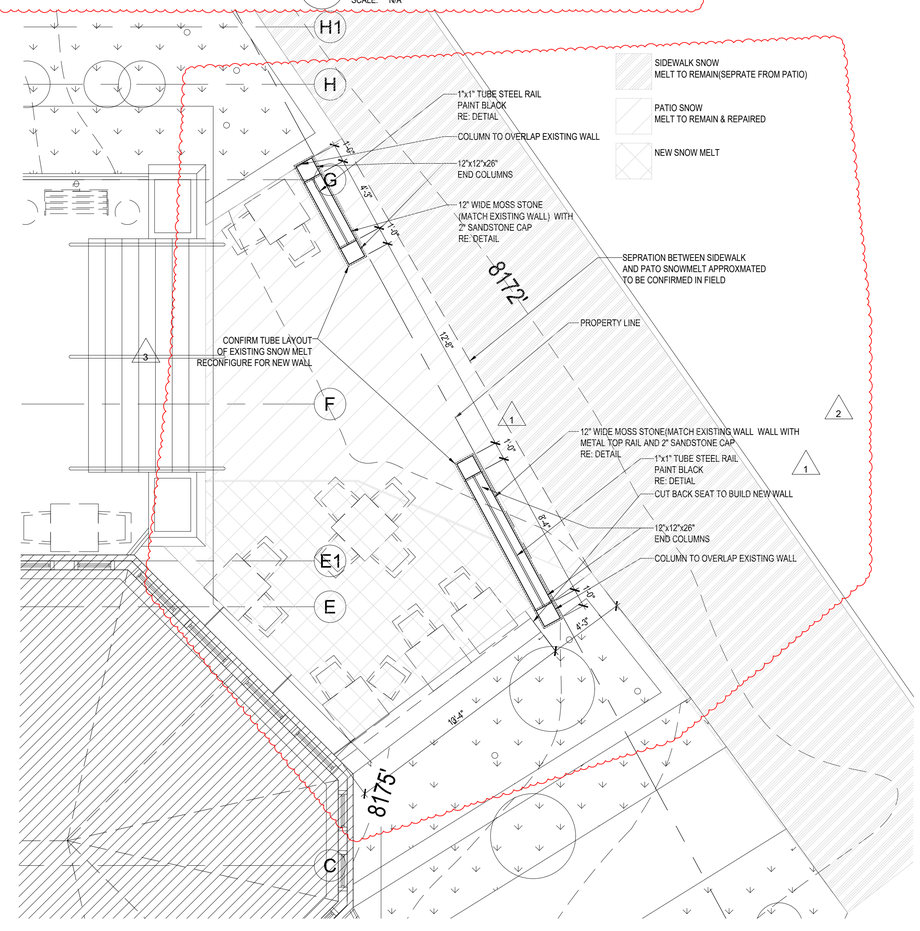

1 MAIN LEVEL (LEVEL 1) RENO PLAN

SCALE: 1/4" = 1'-0"

PLAN NORTH TRUE NORTH

STUDIOLEMONADE

4950 Ward rd,
Wheat Ridge, CO 80033
p. 303 . 449 . 0038

All design documents prepared by studioLEMONADE shall remain property of studioLEMONADE and shall not be copied, changed, or disclosed in any form whatsoever without first obtaining the express written consent of studioLEMONADE.

NOTICE: DUTY OF COOPERATION
Release of these plans contemplates further cooperation among the owner, his contractor, and the designer. Design and construction are complex. Although the designer and his consultants have performed their services with care and diligence, they cannot guarantee perfection. Communication is imperfect and every contingency cannot be anticipated. Any ambiguity or discrepancy discovered by the use of these plans shall be reported immediately to the designer. Failure to notify the designer compounds misunderstanding and increases construction costs. A failure to cooperate by a simple notice to the designer shall relieve the designer from his responsibility for the consequences. Changes made from the plans without consent of the designer are unauthorized and shall relieve the designer of responsibility for all consequences arriving out of such changes.

gravity haus

GRAVITY HAUS - VAIL PHASE 2 RENOVATION

352 EAST MEADOW DRIVE, VAIL CO, 81657
VAIL VILLAGE FILING 1, TRACT B

REVISIONS:

Note:
REV 1 10.20.2021
REV 2 11.03.2021
REV3 04.25.2022

Project #: 405

DRB SET

RENO PLAN - LEVEL 1

A103

09.29.21

VAIL TOWN PLANNING AND ENVIRONMENTAL AGENDA MEMO

MEETING DATE: 5/4/2022

ITEM/TOPIC: DRB22-0104 - Gravity Haus Vail LLC

ATTACHMENTS:

File Name	Description
DRB22-0104_Documents.pdf	DRB22-0104 Documents
DRB22-0104_Pics.pdf	DRB22-0104 Pics

Detailed Product Dimensions & Specifications

ENCLO
HIDE IT WITH STYLE

Charleston Screen Kit (38” W x 42” H)

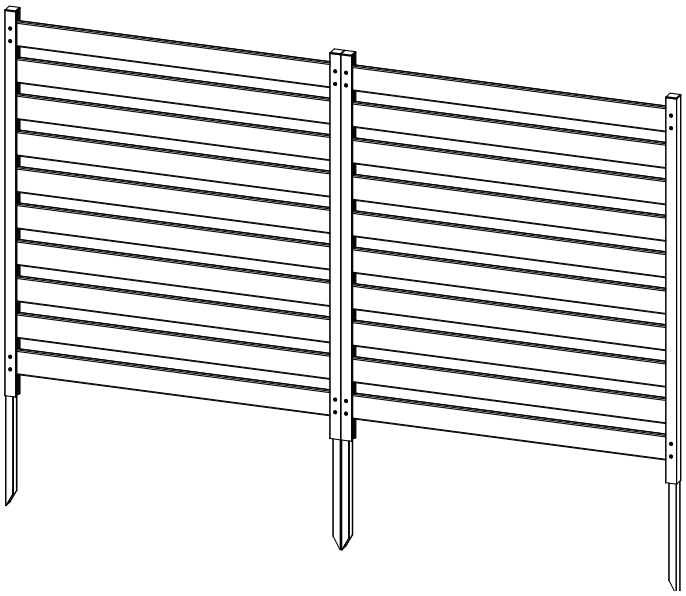

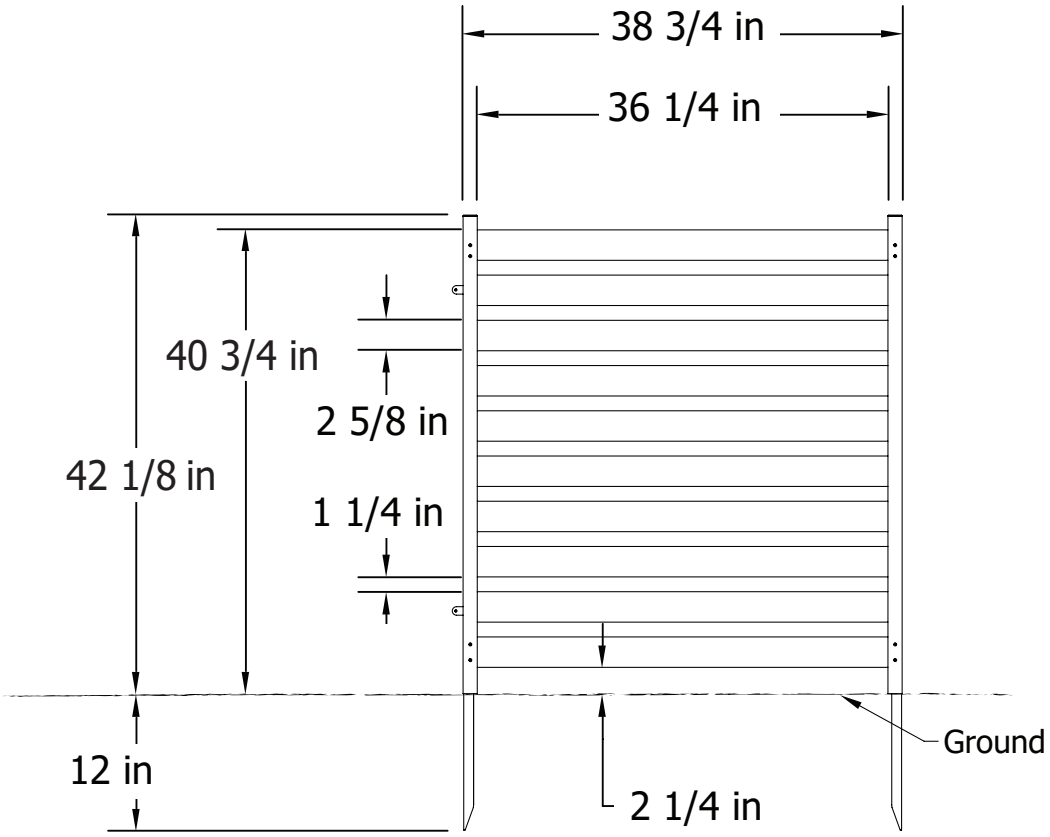

TOWN OF VAIL

JOINT PROPERTY OWNER
WRITTEN APPROVAL LETTER

The applicant must submit written joint property owner approval for applications affecting shared ownership properties such as duplex, condominium, and multi-tenant buildings. This form, or similar written correspondence, must be completed by the adjoining duplex unit owner or the authorized agent of the home owner's association in the case of a condominium or multi-tenant building. All completed forms must be submitted with the applicants completed application.

I, (print name) Jesse Angelo HOA Board President, a joint owner, or authority of the association, of property located at Gravity Haus Vail 352 East Meadow Dr Vail Co 81657, provide this letter as written approval of the plans dated 9/1/21 which have been submitted to the Town of Vail Community Development Department for the proposed improvements to be completed at the address noted above. I understand that the proposed improvements include:

Adding air conditioning to to hotel units on the first floor of the hotel. Hotel rooms #13 and #14. Adding an additional condensor to the oustide of the building to "power" the air conditioning units. The condeser will be placed on the front side of the hotel close to the three existing hotel air conditioning units.

I understand that modifications may be made to the plans over the course of the review process to ensure compliance with the Town's applicable codes and regulations; and that it is the sole responsibility of the applicant to keep the joint property owner apprised of any changes and ensure that the changes are acceptable and appropriate. Submittal of an application results in the applicant agreeing to this statement.

Signature

09/12/2021
Date

Jesse Angelo
Print Name

HOA Board President
Title/Position

JA (Initials) I/We authorize any and all changes submitted to the Town in reference to the above mentioned project. I/We waive all rights to notification and review of submitted changes.

_____ (Initials) I/We do not authorize any changes submitted to the Town in reference to the above mentioned project. I/We wish to receive notifications and reviews of submitted changes.

March 24, 2022

To Whom It May Concern

The HOA Board approves the installation of screens for the AC units at Gravity Haus. Please let me know if you need any additional information.

Thank you,

Jesse Angelo
HOA Board Director

M-SERIES

SUBMITTAL DATA: MXZ-3C30NA
MULTI-INDOOR INVERTER HEAT-PUMP SYSTEM

MITSUBISHI ELECTRIC

Job Name:	
System Reference:	Date:

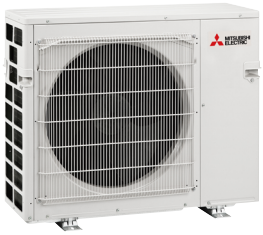

Outdoor Unit: MXZ-3C24NA

ACCESSORIES
- 3/8" x 1/2" Port Adapter (MAC-A454JP-E)
- 1/2" x 3/8" Port Adapter (MAC-A455JP-E)
- 1/2" x 5/8" Port Adapter (MAC-A456JP-E)
- 1/4" x 3/8" Port Adapter (PAC-493PI)
- 3/8" x 5/8" Port Adapter (PAC-SG76RJ-E)
- M-NET Adapter (PAC-IF01MNT-E)
- Base Heater (PAC-645BH-E)

(For data on specific indoor units, see the MXZ-C Technical and Service Manual.)

Specifications			Model Name
Unit Type			MXZ-3C30NA
Cooling* (Non-ducted / Ducted)	Rated Capacity	Btu/h	28,400 / 27,400
	Capacity Range	Btu/h	12,600-28,400 / 12,600-27,400
	Rated Total Input	W	2,680 / 2,860
Heating at 47°F* (Non-ducted / Ducted)	Rated Capacity	Btu/h	28,600 / 27,600
	Capacity Range	Btu/h	11,400-36,000 / 11,400-35,000
	Rated Total Input	W	2,150 / 2,220
Heating at 17°F* (Non-ducted/Ducted)	Rated Capacity	Btu/h	16,000 / 15,100
	Rated Total Input	W	2,120 / 2,140
Electrical Requirements	Power Supply	Voltage, Phase, Hertz	208 / 230V, 1-Phase, 60 Hz
	Recommended Fuse/Breaker Size	A	25
	MCA	A	22.1
Voltage	Indoor - Outdoor S1-S2	V	AC 208 / 230
	Indoor - Outdoor S2-S3	V	DC ±24
Compressor			INVERTER-driven Scroll Hermetic
Fan Motor (ECM)		F.L.A.	1.9
Sound Pressure Level	Cooling	dB(A)	52
	Heating		56
External Dimensions (H x W x D)		In (mm)	31-11/32 x 37-13/32 x 13 (796 x 950 x 330)
Net Weight		Lbs (kg)	135 (61)
External Finish			Munsell 3.0Y 7.8/1.1
Refrigerant Pipe Size O.D.	Liquid (High Pressure)	In (mm)	1/4 (12.7)
	Gas (Low Pressure)		A: 1/2 (6.35) ; B,C: 3/8 (9.52)
Max. Refrigerant Line Length		Ft (m)	230 (70)
Max. Piping Length for Each Indoor Unit		Ft (m)	82 (25)
Max. Refrigerant Pipe Height Difference	If IDU is Above ODU	Ft (m)	49 (15)
	If IDU is Below ODU		49 (15)
Connection Method			Flared/Flared
Refrigerant			R410A

*** Rating Conditions per AHRI Standard:**

Cooling | Indoor: 80° F (27° C) DB / 67° F (19° C) WB
Cooling | Outdoor: 95° F (35° C) DB / 23.9° C (75° F) WB

Heating at 47°F | Indoor: 70° F (21° C) DB / 60° F (16° C) WB
Heating at 47°F | Outdoor: 47° F (8° C) DB / 43° F (6° C) WB

Heating at 17° F | Indoor: 70° F (21° C) DB
Heating at 17° F | Outdoor: 17° F (-8° C) DB / 15° F (-9° C) WB

Specifications are subject to change without notice.

© 2016 Mitsubishi Electric US, Inc.

SPECIFICATIONS: MXZ-3C30NA, contd.

OPERATING RANGE

	Outdoor
Cooling	14 to 115° F (−10 to 46° C) DB
Heating	5 to 65° F (−15 to 18° C) WB

ENERGY EFFICIENCIES

Indoor Unit Type	SEER	EER	HSPF	COP @ 47°F	COP @ 17°F
Non-ducted (06 + 06 + 09)	19.0	10.6	10.6	3.90	2.77
Ducted and Non-ducted	17.6	10.1	10.1	3.77	2.78
Ducted (09 + 09 + 09)	16.2	9.6	9.6	3.64	2.78

NOTES:
- Minimum of two Indoor Units must be connected to the MXZ-3C30NA.
- Minimum installed capacity cannot be less than 12,000 Btu/h.
- Total connected capacity must not exceed 130% of outdoor unit capacity.
- System can operate with only one Indoor Unit turned on.
- Information provided at 208/230V.
- For Reference:
  - MXZ-C Technical & Service Manual for detailed specifications and additional information per Indoor Unit Combination.
  - MXZ Series Multi-Zone Indoor/Outdoor Combination Table for allowed unit combinations.

MVZ CONNECTION RULES:
- Only 1 MVZ may be used on any system.
- When an MVZ is connected, total connected capacity must be 100% or less.
- When an MVZ is connected, no P-Series indoor units can be used (PCA, PLA, or PEAD).

Notes:

© 2016 Mitsubishi Electric US, Inc.

MXZ-3C30NA OPERATIONAL PERFORMANCE

NON-DUCTED:

# of indoor unit	Total Nominal Capacity (x1000 Btu/h)	Total Indoor Unit Capacity (Btu/h)	Operational Performance for Indoor Unit Combinations (Unit A + Unit B + Unit C)	Cooling Capacity Range (Btu/h) / Heating Capacity Range (Btu/h)		
				Unit A	Unit B	Unit C
1	6	6,000	6	6,000	-	-
		7,400		7,400	-	-
1	9	9,000	9	9,000	-	-
		11,000		11,000	-	-
1	12	12,000	12	12,000	-	-
		14,400		14,400	-	-
1	15	14,000	15	14,000	-	-
		18,000		18,000	-	-
1	18	17,200	18	17,200	-	-
		21,600		21,600	-	-
1	24	22,500	24	22,500	-	-
		27,600		27,600	-	-
2	12	12,000	6 + 6	6,000	6,000	-
		14,800		7,400	7,400	-
2	15	15,000	6 + 9	6,000	9,000	-
		18,400		7,400	11,000	-
2	18	18,000	6 + 12	6,000	12,000	-
		22,000		7,500	14,500	-
2	18	20,000	9 + 9	10,000	10,000	-
		22,000		11,000	11,000	-
2	21	20,000	6 + 15	6,000	14,000	-
		25,400		7,400	18,000	-
2	21	20,000	9 + 12	8,600	11,400	-
		25,400		11,000	14,400	-
2	24	23,000	6 + 18	5,900	17,100	-
		27,600		7,000	20,600	-
2	24	23,000	9 + 15	9,000	14,000	-
		27,600		10,500	17,100	-
2	24	23,000	12 + 12	11,500	11,500	-
		27,600		13,800	13,800	-
2	27	25,800	9 + 18	8,900	16,900	-
		27,600		9,300	18,300	-
2	27	25,800	12 + 15	11,900	13,900	-
		27,600		12,300	15,300	-
2	30	27,200	12 + 18	11,200	16,000	-
		27,600		11,000	16,600	-
2	30	27,200	15 + 15	13,600	13,600	-
		27,600		13,800	13,800	-
2	30	27,200	6 + 24	5,700	21,500	-
		27,600		5,800	21,800	-
2	33	27,200	9 + 24	7,800	19,400	-
		27,600		7,900	19,700	-
2	33	27,200	15 + 18	12,200	15,000	-
		27,600		12,500	15,100	-
2	36	27,200	18 + 18	13,600	13,600	-
		27,600		13,800	13,800	-
2	36	27,200	12 + 24	9,500	17,700	-
		27,600		9,500	18,100	-
3	18	18,000	6 + 6 + 6	9,000	9,000	-
		22,200		7,400	7,400	7,400
3	21	21,000	6 + 6 + 9	6,000	6,000	9,000
		25,800		7,400	7,400	11,000
3	24	24,000	6 + 6 + 12	6,000	6,000	12,000
		28,400		7,200	7,200	14,000
3	24	24,000	6 + 9 + 9	6,000	9,000	9,000
		28,400		7,100	10,600	10,600
3	27	26,000	6 + 6 + 15	6,000	6,000	14,000
		28,400		6,400	6,400	15,600
3	27	26,000	6 + 9 + 12	5,800	8,700	11,600
		28,400		6,400	9,500	12,500

© 2016 Mitsubishi Electric US, Inc.

MXZ-3C30NA OPERATIONAL PERFORMANCE, contd.

NON-DUCTED:

# of indoor unit	Total Nominal Capacity (x1000 Btu/h)	Total Indoor Unit Capacity (Btu/h)	Operational Performance for Indoor Unit Combinations (Unit A + Unit B + Unit C)	Cooling Capacity Range (Btu/h) / Heating Capacity Range (Btu/h)		
				Unit A	Unit B	Unit C
3	27	26,000	9 + 9 + 9	8,700	8,700	8,700
		28,400		9,500	9,500	9,500
3	30	28,400	6 + 6 + 18	5,800	5,800	16,700
		28,600		5,800	5,800	17,000
3	30	28,400	6 + 9 + 15	5,900	8,800	13,700
		28,600		5,800	8,600	14,100
3	30	28,400	6 + 12 + 12	5,700	11,400	11,400
		28,600		5,800	11,400	11,400
3	30	28,400	9 + 9 + 12	8,500	8,500	11,400
		28,600		8,600	8,600	11,300
3	33	29,600	6 + 9 + 18	5,500	8,300	15,800
		29,600		5,500	8,100	16,000
3	33	29,600	6 + 12 + 15	5,600	11,100	13,000
		29,600		5,500	10,700	13,400
3	33	29,600	9 + 9 + 15	8,300	8,300	13,000
		29,600		8,100	8,100	13,300
3	33	29,600	9 + 12 + 12	8,100	10,800	10,800
		29,600		8,200	10,700	10,700
3	36	30,000	6 + 6 + 24	5,200	5,200	19,600
		30,000		5,200	5,200	19,500
3	36	30,000	6 + 12 + 18	5,100	10,200	14,700
		30,000		5,100	10,000	14,900
3	36	30,000	12 + 12 + 12	10,000	10,000	10,000
		30,000		10,000	10,000	10,000
3	36	30,000	6 + 15 + 15	5,300	12,400	12,400
		30,000		5,100	12,400	12,400
3	36	30,000	9 + 9 + 18	7,700	7,700	14,700
		30,000		7,600	7,600	14,900
3	36	30,000	9 + 12 + 15	7,700	10,300	12,000
		30,000		7,600	10,000	12,400

© 2016 Mitsubishi Electric US, Inc.

MXZ-3C30NA OPERATIONAL PERFORMANCE, contd.

DUCTED:

# of indoor unit	Total Nominal Capacity (x1000 Btu/h)	Total Indoor Unit Capacity (Btu/h)	Operational Performance for Indoor Unit Combinations (Unit A + Unit B + Unit C)	Cooling Capacity Range (Btu/h) / Heating Capacity Range (Btu/h)		
				Unit A	Unit B	Unit C
1	9	9,000	9	9,000	-	-
		10,900		10,900	-	-
1	12	12,000	12	12,000	-	-
		13,600		13,600	-	-
1	15	15,000	15	15,000	-	-
		18,000		18,000	-	-
1	18	17,200	18	17,200	-	-
		21,600		21,600	-	-
1	24	24,000	24	24,000	-	-
		26,000		26,000	-	-
2	18	18,000	9 + 9	9,000	9,000	-
		21,800		10,900	10,900	-
2	21	21,000	9 + 12	9,000	12,000	-
		24,500		10,900	13,600	-
2	24	24,000	9 + 15	9,000	15,000	-
		27,200		10,300	16,900	-
2	27	26,200	9 + 18	9,000	17,200	-
		27,400		9,200	18,200	-
2	33	27,200	9 + 24	7,400	19,800	-
		27,400		8,100	19,300	-
2	24	24,000	12 + 12	12,000	12,000	-
		27,200		13,600	13,600	-
2	27	26,200	12 + 15	11,600	14,600	-
		27,400		11,800	15,600	-
2	30	27,200	12 + 18	11,200	16,000	-
		27,400		10,600	16,800	-
2	36	27,200	12 + 24	9,100	18,100	-
		27,400		9,400	18,000	-
2	30	27,200	15 + 15	13,600	13,600	-
		27,400		13,700	13,700	-
2	33	27,200	15 + 18	12,700	14,500	-
		27,400		12,500	14,900	-
2	36	27,200	18 + 18	13,600	13,600	-
		27,400		13,700	13,700	-
3	27	27,000	9 + 9 + 9	9,000	9,000	9,000
		27,400		9,100	9,100	9,100
3	30	27,400	9 + 9 + 12	8,200	8,200	11,000
		27,600		8,500	8,500	10,600
3	33	27,800	9 + 9 + 15	7,600	7,600	12,600
		27,800		7,600	7,600	12,600
3	33	27,800	9 + 12 + 12	7,600	10,100	10,100
		27,800		8,000	9,900	9,900
3	36	28,200	9 + 9 + 18	7,200	7,200	13,800
		28,000		7,000	7,000	13,900
3	36	28,200	9 + 12 + 15	7,100	9,400	11,800
		28,000		7,200	9,000	11,900
3	36	28,200	12 + 12 + 12	9,400	9,400	9,400
		28,000		9,300	9,300	9,300

© 2016 Mitsubishi Electric US, Inc.

DIMENSIONS: MXZ-3C30NA

Unit: inch (mm)

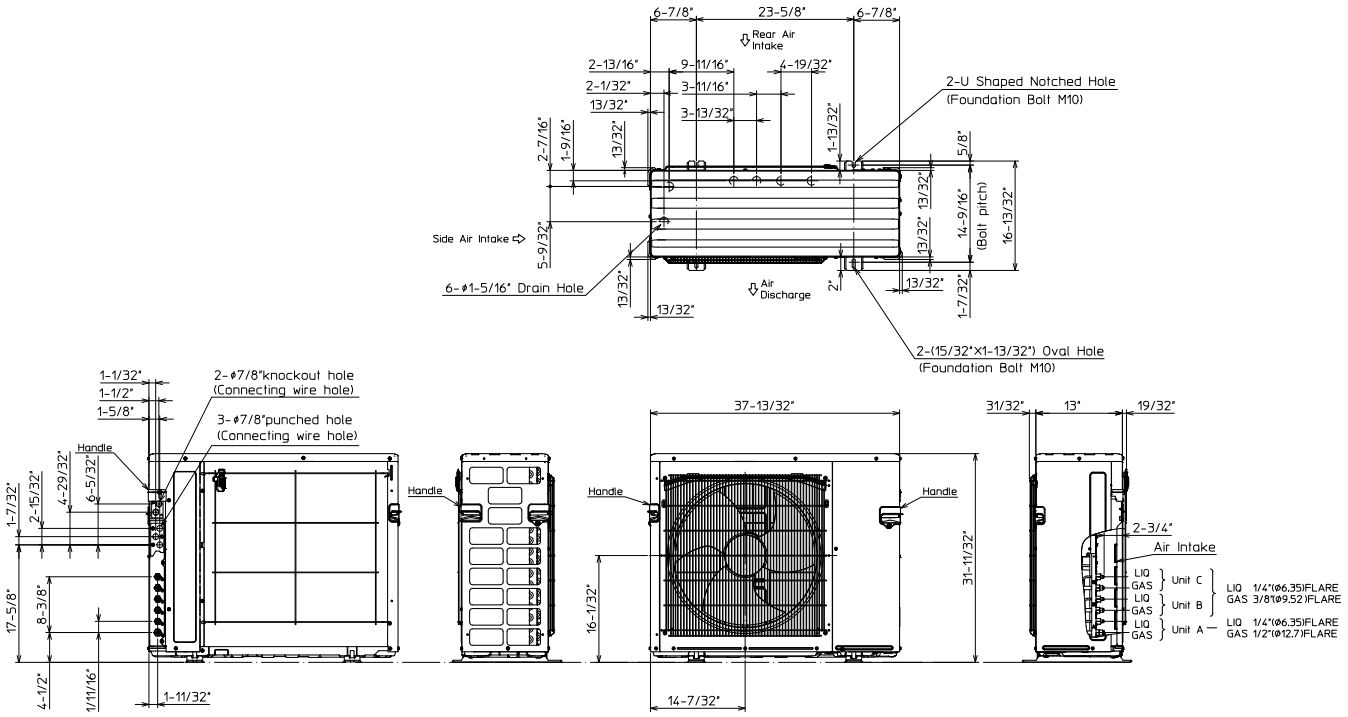

1.FREE SPACE

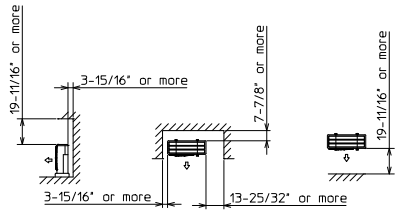

2.SERVICE SPACE

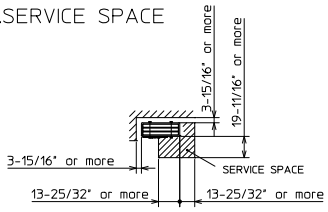

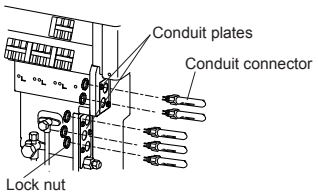

MITSUBISHI ELECTRIC

COOLING & HEATING

1340 Satellite Boulevard. Suwanee, GA 30024
Toll Free: 800-433-4822 www.mehvac.com

AHRI CERTIFIED™ www.ahridirectory.org Unitary Small HP AHRI Standard 210/240 Certification applies only when the complete system is listed with AHRI.

C ETL LISTED US Intertek

FORM# MXZ-3C30NA for Multiple Indoor Unit Styles - 201601

Specifications are subject to change without notice.

© 2016 Mitsubishi Electric US, Inc.

M-SERIES

SUBMITTAL DATA: MSZ-GL15NA

15,000 BTU/H WALL-MOUNTED INDOOR UNIT FOR MXZ-C MULTI-ZONE HEAT PUMP SYSTEM

MITSUBISHI ELECTRIC

Job Name:	
System Reference:	Date:

Indoor Unit: MSZ-GL15NA	Wireless Remote Controller

GENERAL FEATURES

- Slim wall-mounted indoor units provide zone comfort control
- The outdoor unit powers the indoor unit, and should a power outage occur, the system is automatically restarted when power returns
- Multiple fan speed options: Quiet, Low, Medium, High, Super-high, Auto
- Multiple control options available:
  - Hand-held Remote Controller (provided with unit)
  - kumo cloud® smart device app for remote access
  - Third-party interface options
  - Wired or wireless controllers
- Hot-Start Technology: no cold air rush at equipment startup or when restarting after Defrost Cycle
- Quiet operation
- Smart Set: recalls a preferred preset temperature setting at the touch of a button

Specifications are subject to change without notice.

© 2020 Mitsubishi Electric Trane HVAC US LLC. All rights reserved.

SPECIFICATIONS: MSZ-GL15NA

Cooling Capacity[1, 3]		BTU/H	14,000
Heating Capacity[2, 3]		BTU/H	18,000
Electrical	Voltage, Phase, Frequency		208/230V, 1 phase, 60Hz
	Guaranteed Voltage Range	V AC	187 - 253
	Voltage: Indoor - Outdoor, S1-S2	V AC	208 / 230
	Voltage: Indoor - Outdoor, S2-S3	V DC	24
	Short-circuit Current Rating (SCCR)		5
MCA		A	1
Blower Motor Full Load Amperage		A	0.76
Blower Motor Output		W	30
Airflow Rate at Cooling, Dry		CFM	533-420-335-272-205
Airflow Rate at Cooling, Wet		CFM	498-385-300-237-170
Airflow Rate at Heating, Dry		CFM	463-367-304-247-205
Sound Pressure Level (Cooling)		dB(A)	49-44-38-32-26
Sound Pressure Level (Heating)		dB(A)	46-40-35-30-26
Drain Pipe Size		In. (mm)	5/8 (15.88)
Heat Exchanger Type			Plate fin coil
External Finish Color			Munsell 1.0Y 9.2/0.2
Unit Dimensions		W: In. (mm)	31-7/16 (798)
		D: In. (mm)	9-1/8 (232)
		H: In. (mm)	11-5/8 (295)
Package Dimensions		W: In. (mm)	33-1/2 (850)
		D: In. (mm)	12 (300)
		H: In. (mm)	14 (350)
Unit Weight		Lbs. (kg)	22 (10)
Package Weight		Lbs. (kg)	26 (11.5)
Refrigerant	Type		R410A
Piping	Gas Pipe Size O.D. (Flared)	In. (mm)	1/2 (12.7)
	Liquid Pipe Size O.D. (Flared)	In. (mm)	1/4 (6.35)

Notes:

Nominal Conditions	[1]Cooling (Indoor // Outdoor)	°F	80 DB, 67 WB // 95 DB, 75 WB
	[2]Heating at 47°F (Indoor // Outdoor)	°F	70 DB, 60 WB // 47 DB, 43 WB

[3]Capacity varies based on the number of indoor units operating and the model of the Multi-zone Outdoor Unit. For reference to connected capacity charts, please refer Multi-zone Outdoor Unit Operational Performance.

Specifications are subject to change without notice.

© 2020 Mitsubishi Electric Trane HVAC US LLC. All rights reserved.

ACCESSORIES: MSZ-GL15NA

Anti-allergy Enzyme Filter	□ MAC-408FT-E
kumo touch™ RedLINK™ Wireless Controller	□ MHK2
Deluxe MA Remote Controller[1]	□ PAR-40MAAU
Simple MA Controller[1]	□ PAC-YT53CRAU-J
Touch MA Controller[1]	□ PAR-CT01MAU-SB
Wired Remote Sensor	□ M21-EAA-307
Wireless Temperature and Humidity Sensor	□ PAC-USWHS003-TH-1
System Control Interface[2]	□ MAC-334IF-E
Wireless Interface 2	□ PAC-USWHS002-WF-2
Thermostat Interface	□ PAC-US444CN-1
kumo station®	□ PAC-WHS01HC-E
USNAP Interface	□ PAC-WHS01UP-E
IT Extender	□ PAC-WHS01IE-E
BACnet® and MODBUS® Interface	□ PAC-UKPRC001-CN-1
Lockdown Bracket for Hand-held Remote Controllers	□ RCMKP1CB
Blue Diamond Sensor Extension Cable — 15 Ft.	□ C13-103
Blue Diamond Alarm Extension Cable — 6.5 Ft.	□ C13-192
Blue Diamond MultiTank — collection tank for use with multiple pumps	□ C21-014
Blue Diamond Rubber Foot Pads	□ F10-010
Mini Condensate Pump — 230 volt application	□ SI30-230
MegaBlue Advanced Blue Diamond Condensate Pump w/ Reservoir & Sensor	□ X87-835 - 110 to 250V
MaxiBlue Advanced Blue Diamond Mini Condensate Pump w/ Reservoir & Sensor (110V) up to 48,000 BTU/H[recommended]	□ X87-711 - 110V
Advanced Blue Diamond Mini Condensate Pump w/ Reservoir & Sensor (208/230V) [recommended]	□ X87-721 - 208/230V
MicroBlue Blue Diamond Mini Condensate Pump (110/208/230V) up to 18,000 BTU/H	□ X85-003
Fascia Kit for MicroBlue Pump – mounts the MicroBlue and sensor directly beneath the indoor unit	□ T18-016
Drain Pan Level Sensor	□ SS610E
(30A/600V/UL) [fits 2" X 4" utility box] - Black	□ TAZ-MS303
(30A/600V/UL) [fits 2" X 4" utility box] - White	□ TAZ-MS303W

[1] Requires MAC-334IF-E

[2] Allows indoor units to connect to an MA Controller

© 2020 Mitsubishi Electric Trane HVAC US LLC. All rights reserved.

DIMENSIONS: MSZ-GL15NA

Unit: inch

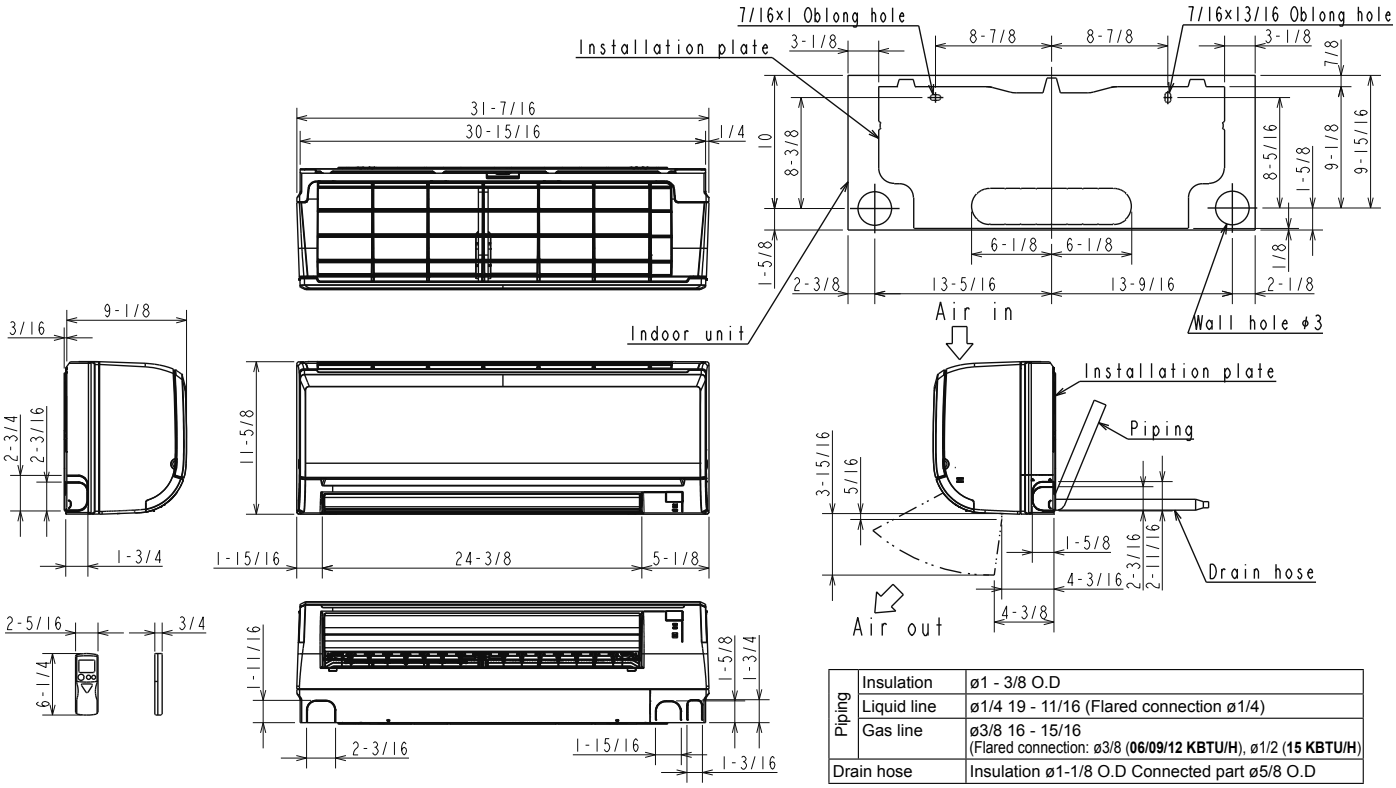

Piping	Insulation	ø1 - 3/8 O.D
	Liquid line	ø1/4 19 - 11/16 (Flared connection ø1/4)
	Gas line	ø3/8 16 - 15/16 (Flared connection: ø3/8 (**06/09/12 KBTU/H**), ø1/2 (**15 KBTU/H**)
Drain hose	Insulation ø1-1/8 O.D Connected part ø5/8 O.D	

1340 Satellite Boulevard, Suwanee, GA 30024
Toll Free: 800-433-4822 www.mehvac.com

FORM# MSZ-GL15NA FOR MXZ-C MULTI-ZONE HEAT PUMP SYSTEM
- 202003

Specifications are subject to change without notice.

© 2020 Mitsubishi Electric Trane HVAC US LLC. All rights reserved.